1.9 Driedimensionale impressie in kleur of foto's


3.5
Sofia


Sofia
Amsterdam


Amsterdam
40 personen




Sofia




Sofia
Amsterdam
40 personen


Sofia
Amsterdam

1.10 Tekeningen

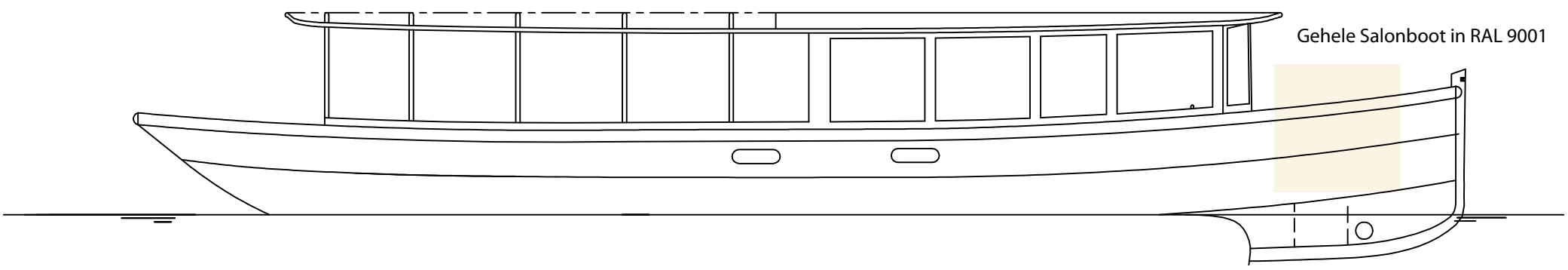

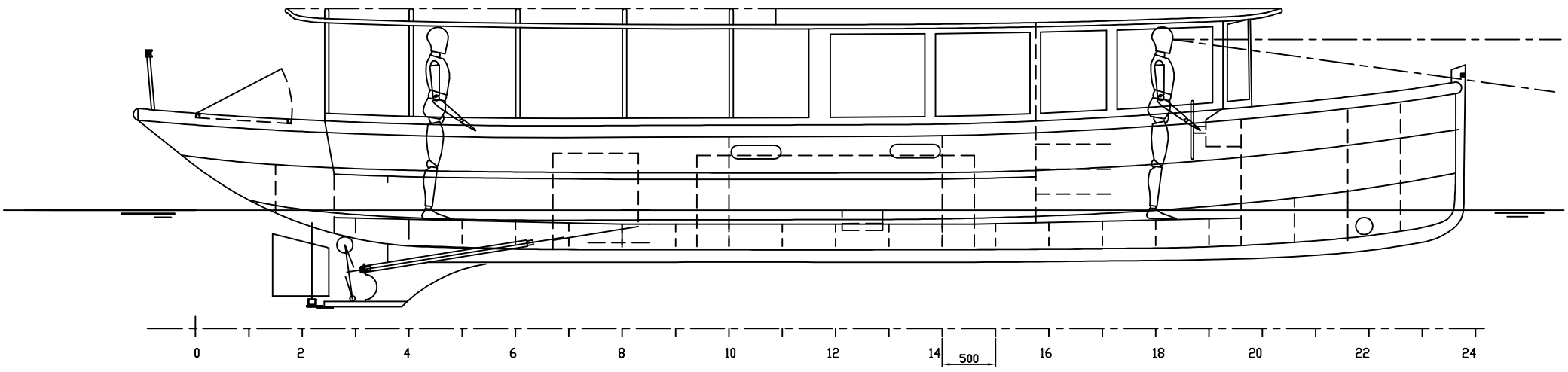

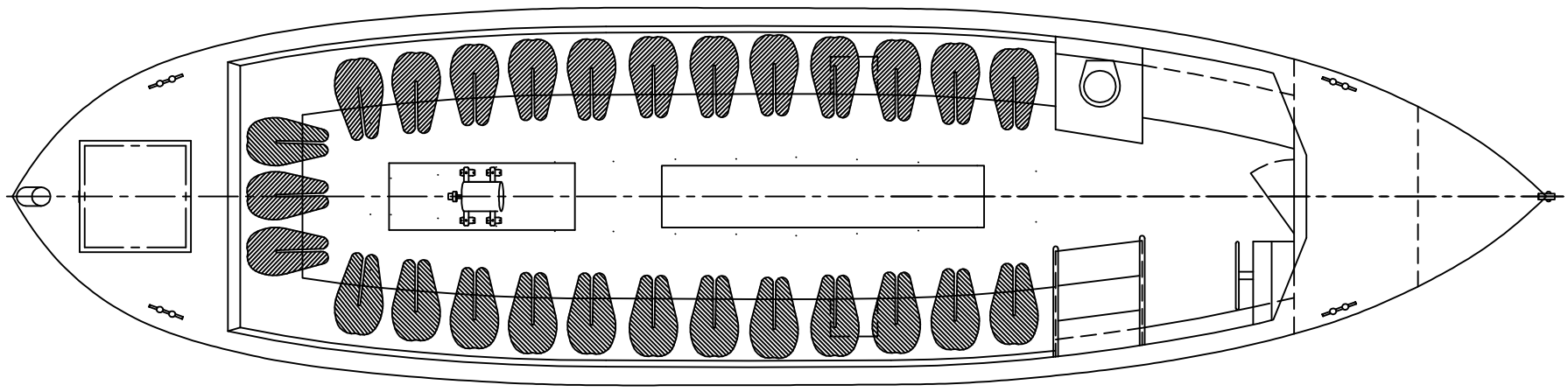

Main Principals

Loa= 12,48 mtr.
Boa= 3,15 mtr Bm=3,05
T = 0,95 mtr
Min freeboard= 1,03 mtr
Appr. weight = 3500Kg

van Vossen Sleeuwijk

[redacted]

change		Project no.:	Drwg. no.:	Date :
change		Title : Salonboat 1250		Scale :
change				Drawn : [redacted]
change		Remarks :		Cad :
change				
change				

All rights reserved. Neither the whole nor any part of this document may be reproduced, stored in retrieval system, or transmitted, in any form or by any means (electronic, mechanical, photocopying, recording or otherwise), without the prior permission of van Vossen Engineering

A1L

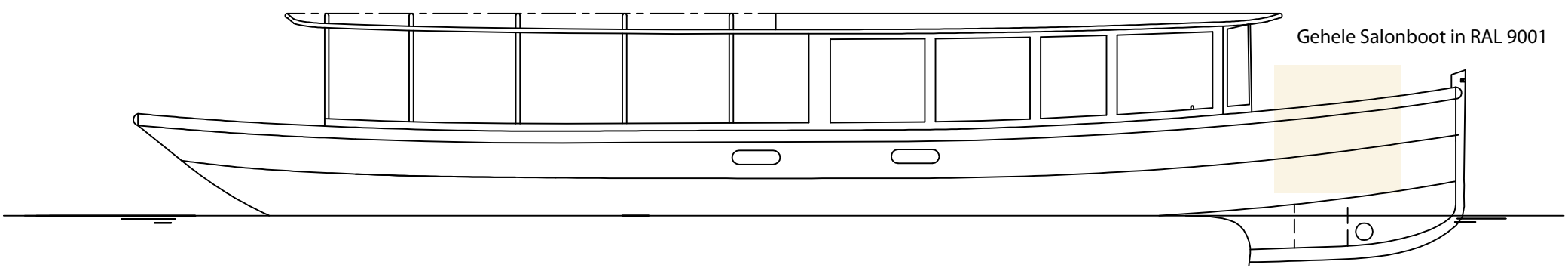

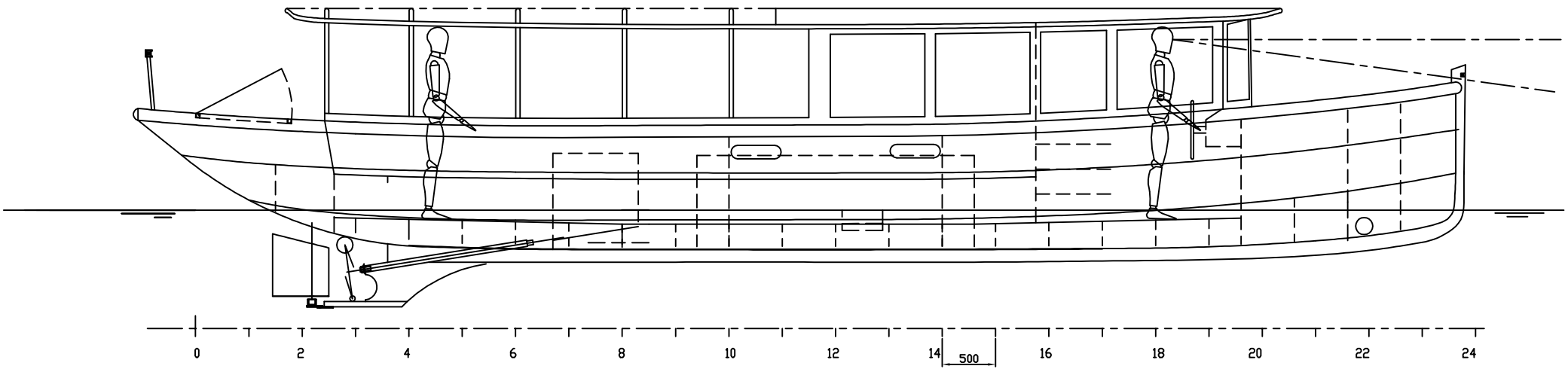

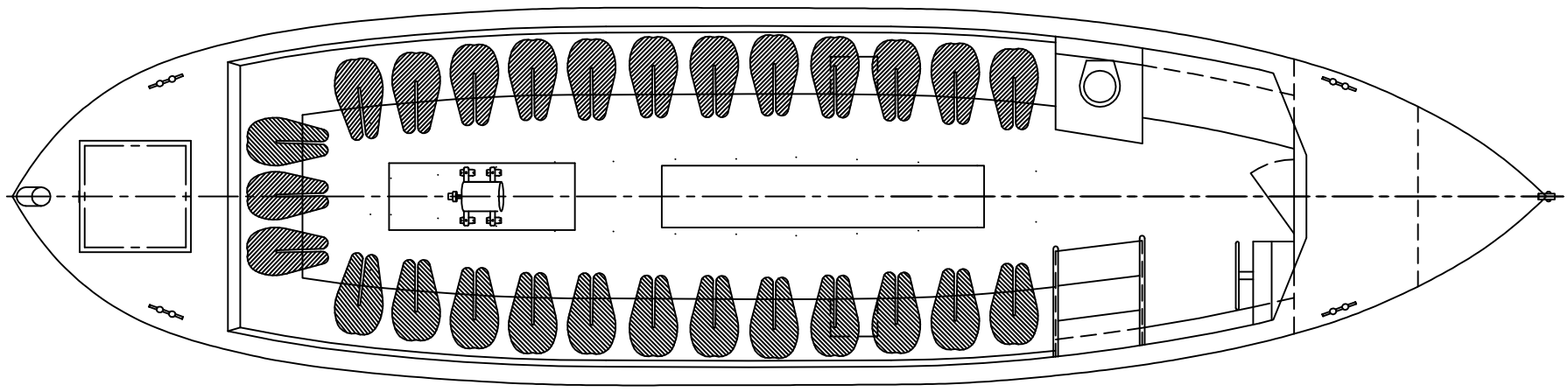

Main Principals

Loa= 12,48 mtr.
Boa= 3,15 mtr Bm=3,05
T = 0,95 mtr
Min freeboard= 1,03 mtr
Appr. weight = 3500Kg

van Vossen Sleeuwijk

[redacted]

change		Project no.:	Drwg. no.:	Date :
change		Title : Salonboat 1250		Scale :
change				Drawn : [redacted]
change		Remarks :		Cad :
change				
change				

All rights reserved. Neither the whole nor any part of this document may be reproduced, stored in retrieval system, or transmitted, in any form or by any means (electronic, mechanical, photocopying, recording or otherwise), without the prior permission of van Vossen Engineering

A1L