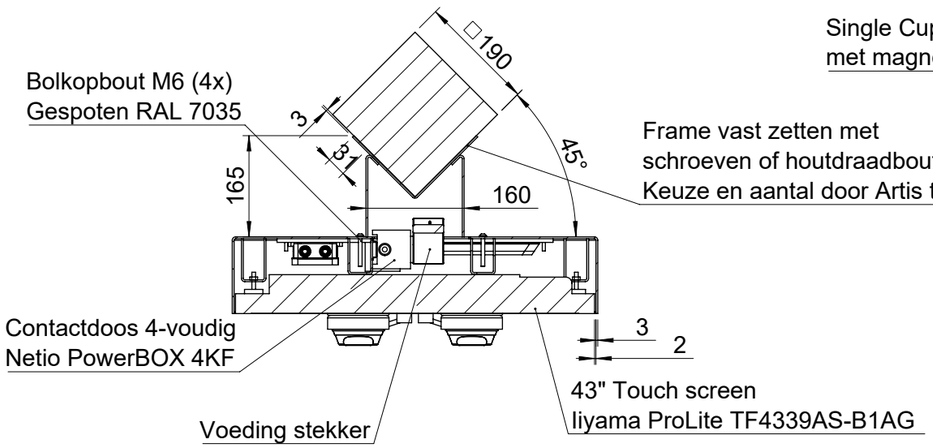

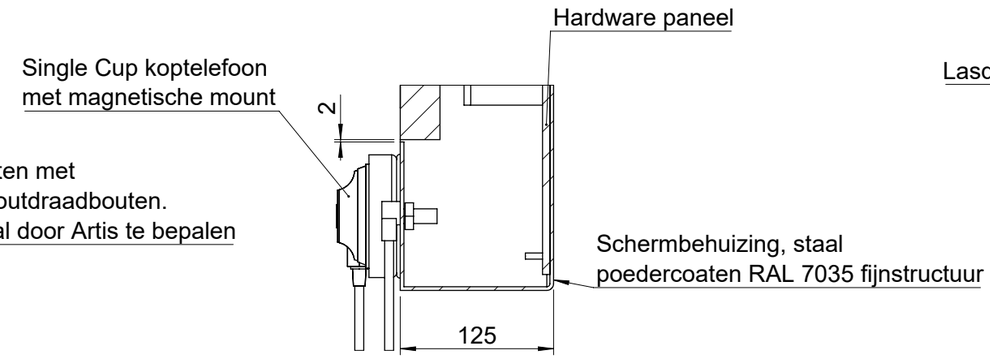

DETAIL C
SCALE 1 : 5

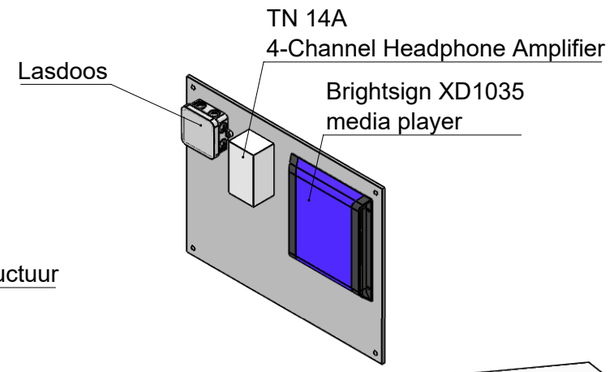

SECTION A-A
SCALE 1 : 10

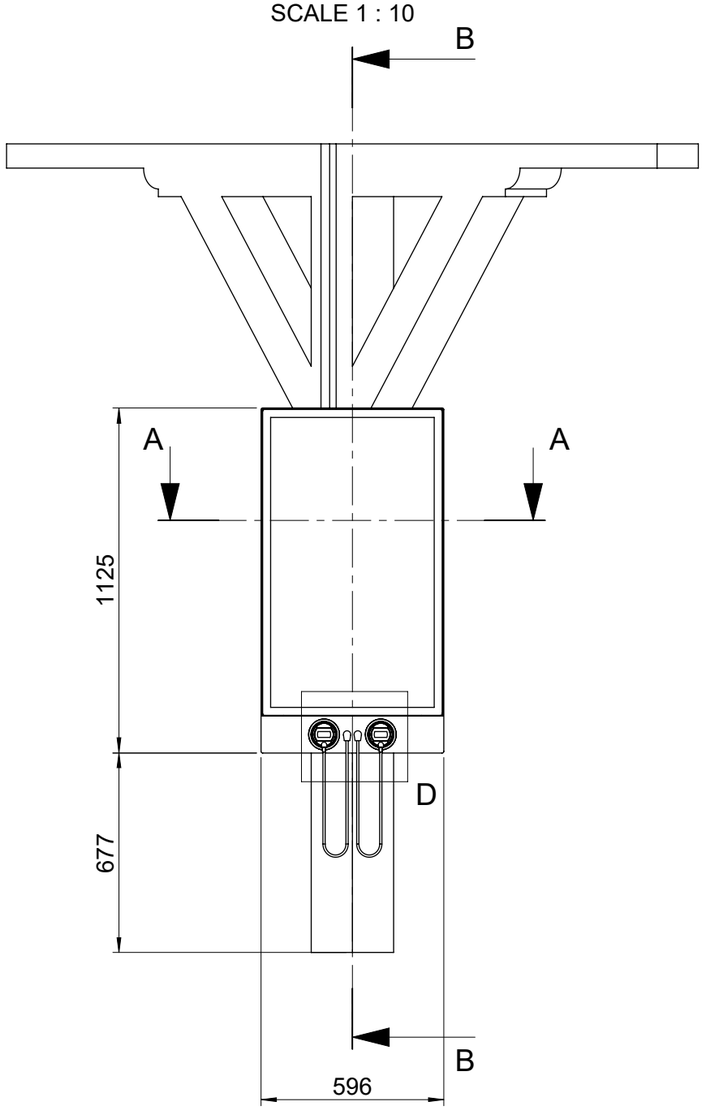

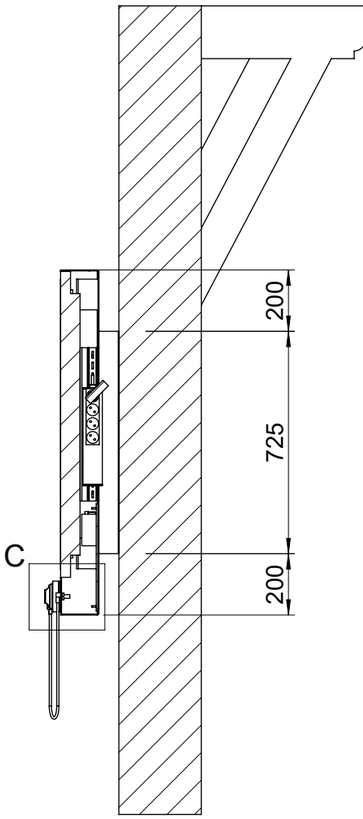

SECTION B-B

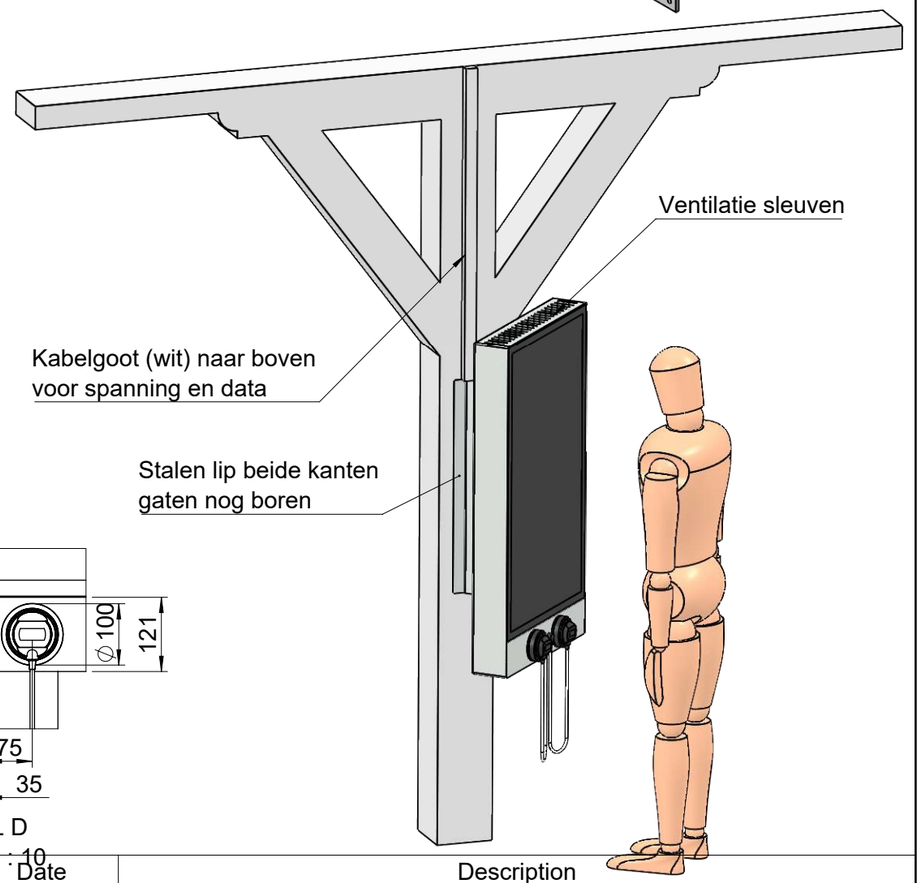

DETAIL D
SCALE 1 : 10

Rev.	Eng.	Date	Description
01	TGOM	09-02-2026	
02	TGOM	11-02-2026	

Description	Schermen met geluidhoorns			Drawing no.	23285F.18.01.02.01A
Exhibit name	Schermen met geluidshoorn			Material	See drawing
Exhibit number	23285F.18.01.02			Finish 1	
Client/ project	Artis Zone F			Finish 2	
Tolerance class		Scale 1:20	Amount	Color	
NEN-ISO 2768-1	m	Format A3		Weight	65.1 kg
NEN-ISO 2768-2	K	Units: mm 3rd angle		Remarks	
ISO 9001 - VCA certified		Copyright 2024		Drawn by	5.1, 2, e Date 16-01-2026

BRUNS

Bruns B.V.
Rijksmonument De Ploeg
Riethovensedijk 20,
5571 CR Bergeijk, Nederland
T 5.1, 2, e
E 5.1, @bruns.nl
I www.bruns.nl