BRU2484 - Klemconstructie

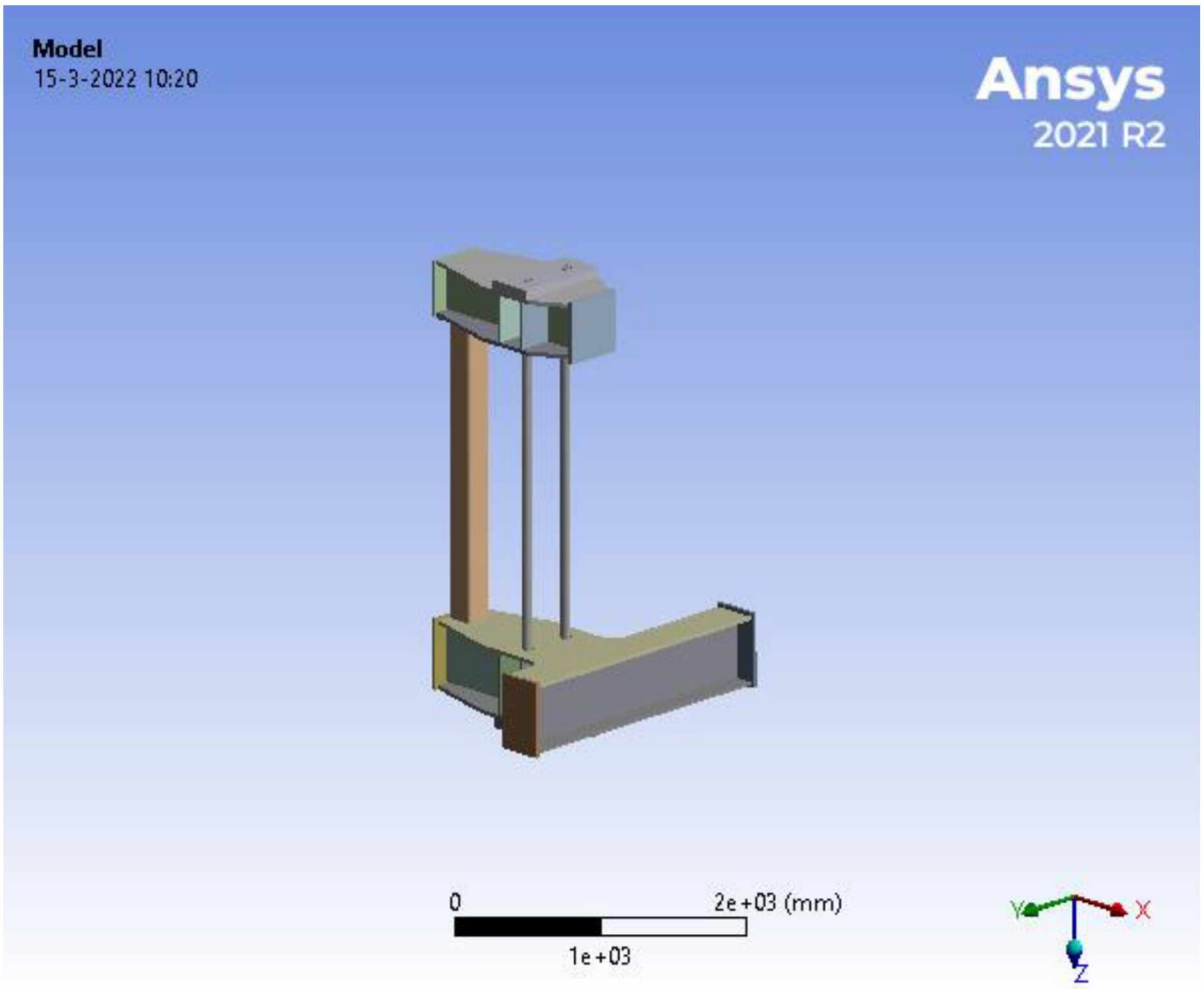

Contents

- **Units**
- **Model (B4, C4)**
  - Geometry
  - Materials
  - Coordinate Systems
  - Connections
    - Pretension
    - Contacts 3
      - Contact Regions
    - Contact Tool
      - Initial Information
      - Status
    - Contact Tool 2
      - Initial Information
      - Status
    - Circular - Solid1215\Solid1211 To Solid1\Solid1
  - Mesh
  - **Static Structural (B5)**
    - Standard Earth Gravity
    - Loads
    - Bolt Pretension
    - Solution (B6)
      - Results
      - Contact Tool
        - Pressure
      - Contact Tool 2
        - Pressure
      - Probes
  - **Eigenvalue Buckling (C5)**
    - Solution (C6)
      - Results
- **Material Data**
  - Structural Steel S355

Units

TABLE 1

Unit System	Metric (mm, kg, N, s, mV, mA) Degrees rad/s Celsius
Angle	Degrees
Rotational Velocity	rad/s
Temperature	Celsius

Model (B4, C4)

Geometry

TABLE 2
Model (B4, C4) > Geometry

Bounding Box	
Length X	1510, mm
Length Y	2130, mm
Length Z	3240, mm
Properties	
Volume	3,2458e+008 mm³
Mass	2547,9 kg
Scale Factor Value	1,
Statistics	
Bodies	28
Active Bodies	28
Nodes	341413
Elements	60230
Mesh Metric	None

FIGURE 1
Model (B4, C4) > Geometry > Image

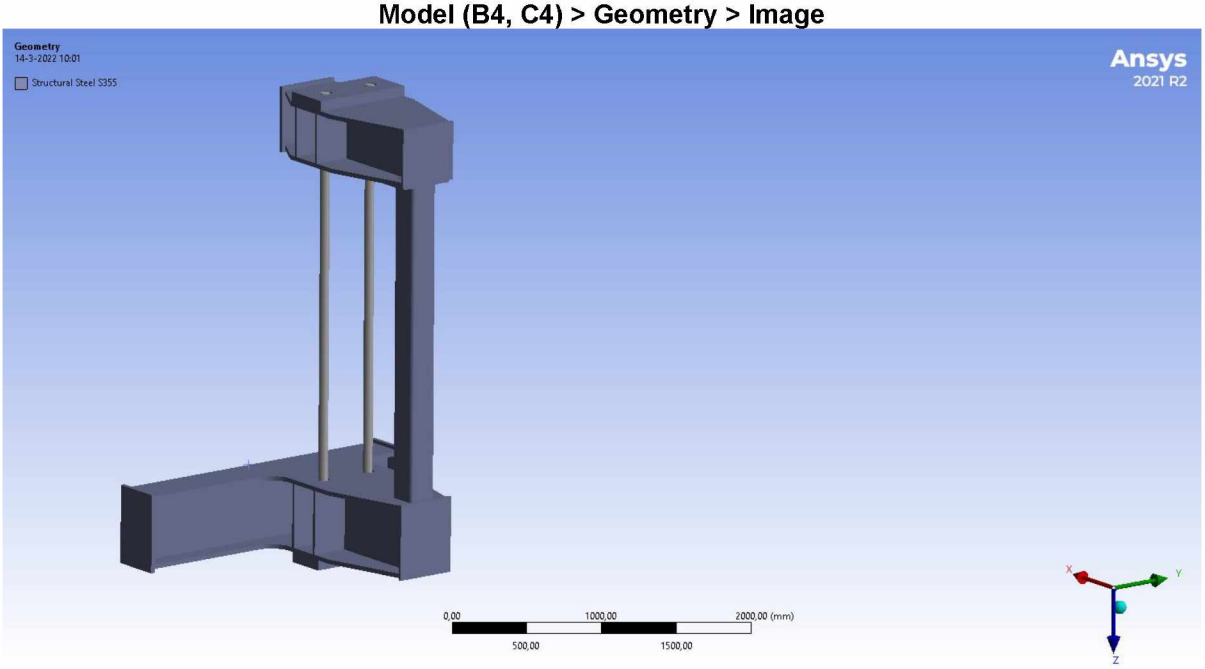

FIGURE 2
Model (B4, C4) > Geometry > Image 2

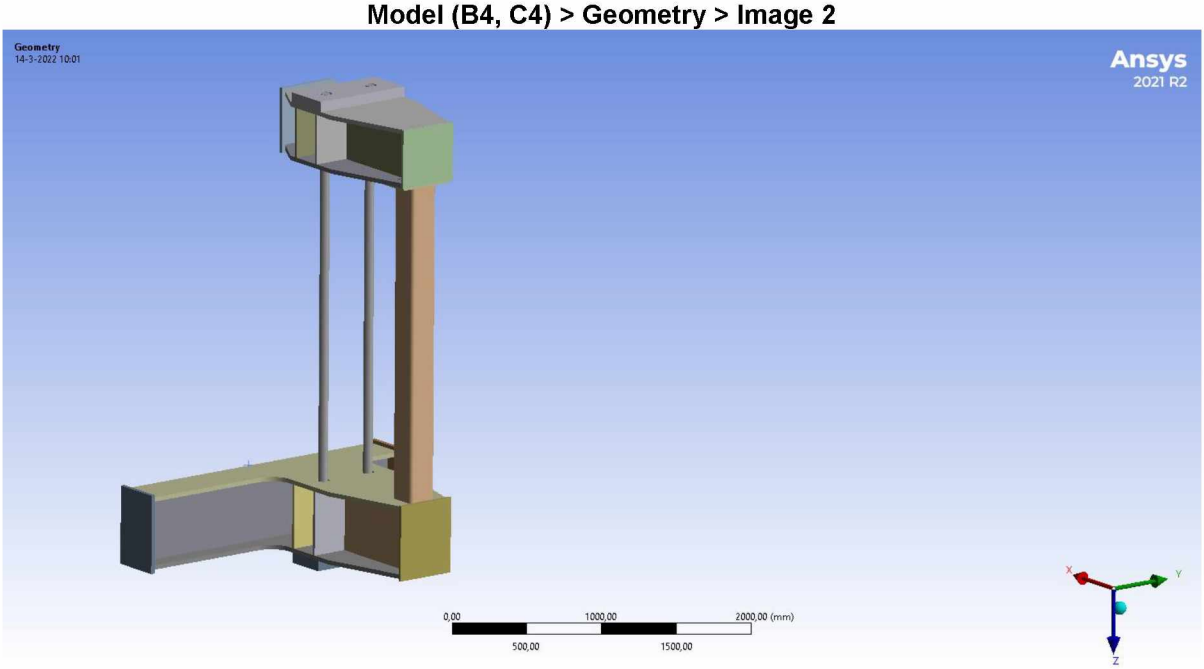

Coordinate Systems

TABLE 4
Model (B4, C4) > Coordinate Systems > Coordinate System

Object Name	*Global Coordinate System*
State	Fully Defined
Definition	
Type	Cartesian
Coordinate System ID	0,
Origin	
Origin X	0, mm
Origin Y	0, mm
Origin Z	0, mm
Directional Vectors	
X Axis Data	[1, 0, 0,]
Y Axis Data	[0, 1, 0,]
Z Axis Data	[0, 0, 1,]

Connections

TABLE 5
Model (B4, C4) > Connections

Object Name	*Connections*
State	Fully Defined
Auto Detection	
Generate Automatic Connection On Refresh	Yes
Transparency	
Enabled	Yes
Analysis Data Management	

Solver Files Directory	C:\AnsysFiles\Projecten\INFRA180842 - BRU2484\OpzetVarianten_ref0e_files\dp0\global\MECH\SYS\Contact Tool\
Contact Tool Settings	
Large Deflection (Beta)	No

Pretension

TABLE 6
Model (B4, C4) > Connections > Contacts 3

Object Name	*Contacts 3*
State	Fully Defined
Definition	
Connection Type	Contact
Scope	
Scoping Method	Geometry Selection
Geometry	6 Bodies
Auto Detection	
Tolerance Type	Slider
Tolerance Slider	0,
Tolerance Value	10,403 mm
Use Range	No
Face/Face	Yes
Face-Face Angle Tolerance	75, °
Face Overlap Tolerance	Off
Cylindrical Faces	Include
Face/Edge	No
Edge/Edge	No
Priority	Include All
Group By	Bodies
Search Across	Bodies
Statistics	
Connections	3
Active Connections	3

TABLE 7
Model (B4, C4) > Connections > Contacts 3 > Contact Regions

Object Name	*Frictional - Solid1215\Solid1211 To Solid1\Solid1*	*Frictional - AandrukPlaatBot\Solid1 To Solid12252\Solid1221121*
State	Fully Defined	Fully Defined
Scope		
Scoping Method	Geometry Selection	Geometry Selection
Contact	1 Face	1 Face
Target	1 Face	1 Face
Contact Bodies	Solid1215\Solid1211	AandrukPlaatBot\Solid1
Target Bodies	Solid1\Solid1	Solid12252\Solid1221121
Protected	No	No
Definition		
Type	Frictional	Frictional
Friction Coefficient	0,2	0,2
Scope Mode	Automatic	Automatic
Behavior	Program Controlled	Program Controlled
Trim Contact	Program Controlled	Program Controlled

Trim Tolerance	10,403 mm	10,403 mm
Suppressed	No	No
Object ID (Beta)	2497	2581
Advanced		
Formulation	Program Controlled	Program Controlled
Small Sliding	Program Controlled	Program Controlled
Detection Method	Program Controlled	Program Controlled
Penetration Tolerance	Program Controlled	Program Controlled
Elastic Slip Tolerance	Program Controlled	Program Controlled
Normal Stiffness	Program Controlled	Program Controlled
Update Stiffness	Program Controlled	Program Controlled
Stabilization Damping Factor	0,	0,
Pinball Region	Program Controlled	Program Controlled
Time Step Controls	None	None
Geometric Modification		
Interface Treatment	Add Offset, No Ramping	Add Offset, No Ramping
Offset	0, mm	0, mm
Contact Geometry Correction	None	None
Target Geometry Correction	None	None

TABLE 8
Model (B4, C4) > Connections > Contacts 3 > Contact Regions

Object Name	*Frictional - AandrukplaatTop\Solid To Solid1225\Solid122111*
State	Fully Defined
Scope	
Scoping Method	Geometry Selection
Contact	1 Face
Target	1 Face
Contact Bodies	AandrukplaatTop\Solid
Target Bodies	Solid1225\Solid122111
Protected	No
Definition	
Type	Frictional
Friction Coefficient	0,2
Scope Mode	Automatic
Behavior	Program Controlled
Trim Contact	Program Controlled
Trim Tolerance	10,403 mm
Suppressed	No
Object ID (Beta)	2584
Advanced	
Formulation	Program Controlled
Small Sliding	Program Controlled
Detection Method	Program Controlled
Penetration Tolerance	Program Controlled
Elastic Slip Tolerance	Program Controlled
Normal Stiffness	Program Controlled
Update Stiffness	Program Controlled

Stabilization Damping Factor	0,
Pinball Region	Program Controlled
Time Step Controls	None
Geometric Modification	
Interface Treatment	Add Offset, No Ramping
Offset	0, mm
Contact Geometry Correction	None
Target Geometry Correction	None

TABLE 9
Model (B4, C4) > Connections > Contact Tools

Object Name	*Contact Tool*
State	Solved
Scope	
Scoping Method	Worksheet

Model (B4, C4) > Connections > Contact Tool

Name	Contact Side
Contact Region	Both
Contact Region 2	Both
Contact Region 3	Both
Contact Region 4	Both
Contact Region 5	Both
Contact Region 6	Both
Contact Region 7	Both
Contact Region 8	Both
Contact Region 10	Both
Contact Region 11	Both
Contact Region 12	Both
Contact Region 13	Both
Contact Region 14	Both
Contact Region 15	Both
Contact Region 16	Both
Contact Region 17	Both
Contact Region 18	Both
Contact Region 19	Both
Contact Region 20	Both
Contact Region 21	Both
Contact Region 23	Both
Contact Region 24	Both
Contact Region 25	Both
Contact Region 26	Both
Contact Region	Both
Contact Region 2	Both
Contact Region 3	Both
Contact Region 4	Both
Contact Region 5	Both
Contact Region 6	Both
Contact Region 7	Both
Contact Region 8	Both
Contact Region 10	Both
Contact Region 12	Both

Contact Region 13	Both
Contact Region 14	Both
Contact Region 15	Both
Contact Region 16	Both
Contact Region 18	Both
Contact Region 19	Both
Contact Region 20	Both
Contact Region 21	Both
Contact Region 22	Both
Contact Region 23	Both
Contact Region 24	Both
Contact Region 26	Both
Contact Region 27	Both
Contact Region 28	Both
Contact Region 29	Both
Contact Region 32	Both
Contact Region 33	Both
Contact Region 28	Both
Contact Region 29	Both
Contact Region 30	Both
Contact Region 36	Both
Contact Region 37	Both
Contact Region 38	Both
Contact Region 39	Both
Contact Region 40	Both
Contact Region 41	Both
Contact Region 42	Both
Contact Region 43	Both

TABLE 10
Model (B4, C4) > Connections > Contact Tool > Contact Data Tables

Object Name	*Initial Information*
State	Solved

Model (B4, C4) > Connections > Contact Tool > Initial Information

Name	Contact Side	Type	Status	Number Contacting	Penetration (mm)	Gap (mm)	Geometric Penetration (mm)	Geometric Gap (mm)	Resulting Pinball (mm)	Real Constant
Contact Region	Contact	Bonded	Inactive	N/A	N/A	N/A	N/A	N/A	N/A	29,
Contact Region	Target	Bonded	Closed	132,	5,3387e-026	0,	9,0949e-013	6,8212e-013	5,0018	30,
Contact Region 2	Contact	Bonded	Closed	40,	5,4223e-027	0,	1,1369e-013	1,1369e-013	5,4295	31,
Contact Region 2	Target	Bonded	Inactive	N/A	N/A	N/A	N/A	N/A	N/A	32,
Contact Region 3	Contact	Bonded	Inactive	N/A	N/A	N/A	N/A	N/A	N/A	33,
Contact Region 3	Target	Bonded	Closed	132,	4,1279e-026	0,	6,8212e-013	6,8212e-013	5,	34,

Contact Region 4	Contact	Bonded	Inactive	N/A	N/A	N/A	N/A	N/A	N/A	35,
Contact Region 4	Target	Bonded	Closed	14,	2,7486e-026	0,	4,5475e-013	2,2737e-013	5,	36,
Contact Region 5	Contact	Bonded	Inactive	N/A	N/A	N/A	N/A	N/A	N/A	37,
Contact Region 5	Target	Bonded	Closed	26,	1,8971e-026	0,	6,8212e-013	4,5475e-013	4,998	38,
Contact Region 6	Contact	Bonded	Inactive	N/A	N/A	N/A	N/A	N/A	N/A	39,
Contact Region 6	Target	Bonded	Closed	26,	2,0033e-026	0,	6,8212e-013	4,5475e-013	4,998	40,
Contact Region 7	Contact	Bonded	Inactive	N/A	N/A	N/A	N/A	N/A	N/A	41,
Contact Region 7	Target	Bonded	Closed	26,	2,8357e-026	0,	6,8212e-013	4,5475e-013	4,9954	42,
Contact Region 8	Contact	Bonded	Closed	38,	3,7175e-027	0,	1,1369e-013	2,2737e-013	5,3288	43,
Contact Region 8	Target	Bonded	Inactive	N/A	N/A	N/A	N/A	N/A	N/A	44,
Contact Region 10	Contact	Bonded	Closed	132,	3,9665e-026	0,	9,0949e-013	9,0949e-013	5,	45,
Contact Region 10	Target	Bonded	Inactive	N/A	N/A	N/A	N/A	N/A	N/A	46,
Contact Region 11	Contact	Bonded	Closed	34,	5,4223e-027	0,	1,1369e-013	1,1369e-013	4,9833	47,
Contact Region 11	Target	Bonded	Inactive	N/A	N/A	N/A	N/A	N/A	N/A	48,
Contact Region 12	Contact	Bonded	Inactive	N/A	N/A	N/A	N/A	N/A	N/A	49,
Contact Region 12	Target	Bonded	Closed	20,	3,2132e-027	0,	4,5475e-013	6,8212e-013	5,	50,
Contact Region 13	Contact	Bonded	Inactive	N/A	N/A	N/A	N/A	N/A	N/A	51,
Contact Region 13	Target	Bonded	Closed	34,	1,7851e-026	0,	4,5475e-013	6,8212e-013	4,9296	52,
Contact Region 14	Contact	Bonded	Inactive	N/A	N/A	N/A	N/A	N/A	N/A	53,

Contact Region 14	Target	Bonded	Closed	34,	1,8824e-026	0,	6,8212e-013	6,8212e-013	4,9296	54,
Contact Region 15	Contact	Bonded	Closed	34,	4,6903e-027	0,	2,2737e-013	2,2737e-013	4,9933	55,
Contact Region 15	Target	Bonded	Inactive	N/A	N/A	N/A	N/A	N/A	N/A	56,
Contact Region 16	Contact	Bonded	Closed	40,	4,2633e-027	0,	1,1369e-013	1,1369e-013	5,4507	57,
Contact Region 16	Target	Bonded	Inactive	N/A	N/A	N/A	N/A	N/A	N/A	58,
Contact Region 17	Contact	Bonded	Inactive	N/A	N/A	N/A	N/A	N/A	N/A	59,
Contact Region 17	Target	Bonded	Closed	132,	3,9665e-026	0,	9,0949e-013	9,0949e-013	5,	60,
Contact Region 18	Contact	Bonded	Inactive	N/A	N/A	N/A	N/A	N/A	N/A	61,
Contact Region 18	Target	Bonded	Closed	26,	2,631e-026	0,	9,0949e-013	4,5475e-013	4,999	62,
Contact Region 19	Contact	Bonded	Inactive	N/A	N/A	N/A	N/A	N/A	N/A	63,
Contact Region 19	Target	Bonded	Closed	26,	4,0943e-026	0,	4,5475e-013	4,5475e-013	4,999	64,
Contact Region 20	Contact	Bonded	Inactive	N/A	N/A	N/A	N/A	N/A	N/A	65,
Contact Region 20	Target	Bonded	Closed	26,	2,601e-026	0,	4,5475e-013	4,5475e-013	4,9967	66,
Contact Region 21	Contact	Bonded	Closed	38,	7,4351e-027	0,	1,1369e-013	2,2737e-013	5,3649	67,
Contact Region 21	Target	Bonded	Inactive	N/A	N/A	N/A	N/A	N/A	N/A	68,
Contact Region 23	Contact	Bonded	Inactive	N/A	N/A	N/A	N/A	N/A	N/A	69,
Contact Region 23	Target	Bonded	Closed	34,	6,061e-027	0,	1,1369e-013	1,1369e-013	4,9833	70,
Contact Region 24	Contact	Bonded	Inactive	N/A	N/A	N/A	N/A	N/A	N/A	71,
Contact Region 24	Target	Bonded	Closed	20,	2,417e-026	0,	4,5475e-013	4,5475e-013	5,	72,

Contact Region 25	Contact	Bonded	Inactive	N/A	N/A	N/A	N/A	N/A	N/A	73,
Contact Region 25	Target	Bonded	Closed	34,	1,8443e-028	0,	6,8212e-013	6,8212e-013	4,9405	74,
Contact Region 26	Contact	Bonded	Closed	34,	1,1153e-026	0,	2,2737e-013	3,4106e-013	4,9816	75,
Contact Region 26	Target	Bonded	Inactive	N/A	N/A	N/A	N/A	N/A	N/A	76,
Contact Region	Contact	Bonded	Closed	80,	9,3355e-027	0,	5,6843e-014	5,6843e-014	5,	83,
Contact Region	Target	Bonded	Inactive	N/A	N/A	N/A	N/A	N/A	N/A	84,
Contact Region 2	Contact	Bonded	Closed	80,	8,558e-026	0,	4,5475e-013	4,5475e-013	5,	85,
Contact Region 2	Target	Bonded	Inactive	N/A	N/A	N/A	N/A	N/A	N/A	86,
Contact Region 3	Contact	Bonded	Inactive	N/A	N/A	N/A	N/A	N/A	N/A	87,
Contact Region 3	Target	Bonded	Closed	130,	3,1719e-027	0,	8,5265e-014	8,5265e-014	5,	88,
Contact Region 4	Contact	Bonded	Inactive	N/A	N/A	N/A	N/A	N/A	N/A	89,
Contact Region 4	Target	Bonded	Closed	130,	3,1716e-027	0,	5,6843e-014	8,5265e-014	5,	90,
Contact Region 5	Contact	Bonded	Inactive	N/A	N/A	N/A	N/A	N/A	N/A	91,
Contact Region 5	Target	Bonded	Closed	26,	4,7019e-029	0,	5,6843e-014	8,5265e-014	4,9984	92,
Contact Region 6	Contact	Bonded	Inactive	N/A	N/A	N/A	N/A	N/A	N/A	93,
Contact Region 6	Target	Bonded	Closed	26,	6,1429e-028	0,	5,6843e-014	5,6843e-014	4,9984	94,
Contact Region 7	Contact	Bonded	Inactive	N/A	N/A	N/A	N/A	N/A	N/A	95,
Contact Region 7	Target	Bonded	Closed	26,	2,4154e-028	0,	5,6843e-014	1,1369e-013	4,9976	96,
Contact Region 8	Contact	Bonded	Closed	30,	4,415e-027	0,	4,5475e-013	9,0949e-013	4,992	97,

Contact Region 8	Target	Bonded	Inactive	N/A	N/A	N/A	N/A	N/A	N/A	98,
Contact Region 10	Contact	Bonded	Closed	30,	1,6092e-027	0,	2,2737e-013	2,2737e-013	4,988	99,
Contact Region 10	Target	Bonded	Inactive	N/A	N/A	N/A	N/A	N/A	N/A	100,
Contact Region 12	Contact	Bonded	Closed	38,	4,6903e-027	0,	2,2737e-013	2,2737e-013	5,3771	101,
Contact Region 12	Target	Bonded	Inactive	N/A	N/A	N/A	N/A	N/A	N/A	102,
Contact Region 13	Contact	Bonded	Inactive	N/A	N/A	N/A	N/A	N/A	N/A	103,
Contact Region 13	Target	Bonded	Closed	208,	2,8422e-014	0,	5,6843e-014	1,1369e-013	5,	104,
Contact Region 14	Contact	Bonded	Closed	130,	4,6527e-027	0,	2,2737e-013	2,2737e-013	5,	105,
Contact Region 14	Target	Bonded	Inactive	N/A	N/A	N/A	N/A	N/A	N/A	106,
Contact Region 15	Contact	Bonded	Inactive	N/A	N/A	N/A	N/A	N/A	N/A	107,
Contact Region 15	Target	Bonded	Closed	44,	2,9426e-027	0,	4,5475e-013	6,8212e-013	4,9493	108,
Contact Region 16	Contact	Bonded	Inactive	N/A	N/A	N/A	N/A	N/A	N/A	109,
Contact Region 16	Target	Bonded	Closed	44,	5,1519e-027	0,	2,2737e-013	6,8212e-013	4,9493	110,
Contact Region 18	Contact	Bonded	Closed	44,	3,6576e-027	0,	1,1369e-013	3,4106e-013	5,	111,
Contact Region 18	Target	Bonded	Inactive	N/A	N/A	N/A	N/A	N/A	N/A	112,
Contact Region 19	Contact	Bonded	Closed	44,	3,1443e-027	0,	1,1369e-013	1,1369e-013	5,	113,
Contact Region 19	Target	Bonded	Inactive	N/A	N/A	N/A	N/A	N/A	N/A	114,
Contact Region 20	Contact	Bonded	Inactive	N/A	N/A	N/A	N/A	N/A	N/A	115,
Contact Region 20	Target	Bonded	Closed	130,	3,4706e-027	0,	2,2737e-013	2,2737e-013	5,	116,

Contact Region 21	Contact	Bonded	Inactive	N/A	N/A	N/A	N/A	N/A	N/A	117,
Contact Region 21	Target	Bonded	Closed	26,	3,3657e-027	0,	2,2737e-013	2,2737e-013	4,9962	118,
Contact Region 22	Contact	Bonded	Inactive	N/A	N/A	N/A	N/A	N/A	N/A	119,
Contact Region 22	Target	Bonded	Closed	26,	3,6354e-027	0,	2,2737e-013	2,2737e-013	4,9962	120,
Contact Region 23	Contact	Bonded	Inactive	N/A	N/A	N/A	N/A	N/A	N/A	121,
Contact Region 23	Target	Bonded	Closed	26,	3,0435e-027	0,	2,2737e-013	1,1369e-013	4,9991	122,
Contact Region 24	Contact	Bonded	Closed	30,	4,8955e-027	0,	4,5475e-013	9,0949e-013	4,992	123,
Contact Region 24	Target	Bonded	Inactive	N/A	N/A	N/A	N/A	N/A	N/A	124,
Contact Region 26	Contact	Bonded	Closed	30,	4,208e-027	0,	2,2737e-013	1,238e-027	4,988	125,
Contact Region 26	Target	Bonded	Inactive	N/A	N/A	N/A	N/A	N/A	N/A	126,
Contact Region 27	Contact	Bonded	Closed	38,	5,2565e-027	0,	2,2737e-013	1,1369e-013	5,3598	127,
Contact Region 27	Target	Bonded	Inactive	N/A	N/A	N/A	N/A	N/A	N/A	128,
Contact Region 28	Contact	Bonded	Inactive	N/A	N/A	N/A	N/A	N/A	N/A	129,
Contact Region 28	Target	Bonded	Closed	208,	9,4158e-027	0,	3,4106e-013	2,2737e-013	4,9984	130,
Contact Region 29	Contact	Bonded	Inactive	N/A	N/A	N/A	N/A	N/A	N/A	131,
Contact Region 29	Target	Bonded	Closed	44,	1,4567e-028	0,	2,2737e-013	6,8212e-013	4,9407	132,
Contact Region 32	Contact	Bonded	Closed	44,	1,1153e-026	0,	2,2737e-013	3,4106e-013	5,	133,
Contact Region 32	Target	Bonded	Inactive	N/A	N/A	N/A	N/A	N/A	N/A	134,
Contact Region 33	Contact	Bonded	Closed	44,	3,1443e-027	0,	1,7053e-013	5,6843e-014	5,	135,

Contact Region 33	Target	Bonded	Inactive	N/A	N/A	N/A	N/A	N/A	N/A	136,
Contact Region 28	Contact	Bonded	Closed	26,	3,6746e-026	0,	6,8212e-013	4,5475e-013	4,9982	77,
Contact Region 28	Target	Bonded	Inactive	N/A	N/A	N/A	N/A	N/A	N/A	78,
Contact Region 29	Contact	Bonded	Closed	26,	3,9932e-026	0,	4,5475e-013	4,5475e-013	4,9979	79,
Contact Region 29	Target	Bonded	Inactive	N/A	N/A	N/A	N/A	N/A	N/A	80,
Contact Region 30	Contact	Bonded	Closed	34,	5,5744e-028	0,	6,8212e-013	6,8212e-013	4,9394	81,
Contact Region 30	Target	Bonded	Inactive	N/A	N/A	N/A	N/A	N/A	N/A	82,
Contact Region 36	Contact	Bonded	Closed	14,	2,3878e-027	0,	5,6843e-014	5,6843e-014	5,	137,
Contact Region 36	Target	Bonded	Inactive	N/A	N/A	N/A	N/A	N/A	N/A	138,
Contact Region 37	Contact	Bonded	Closed	20,	2,2428e-027	0,	4,5475e-013	6,8212e-013	5,	139,
Contact Region 37	Target	Bonded	Inactive	N/A	N/A	N/A	N/A	N/A	N/A	140,
Contact Region 38	Contact	Bonded	Closed	20,	3,6543e-026	0,	2,2737e-013	4,5475e-013	5,	141,
Contact Region 38	Target	Bonded	Inactive	N/A	N/A	N/A	N/A	N/A	N/A	142,
Contact Region 39	Contact	Bonded	Closed	26,	5,9457e-028	0,	5,6843e-014	5,6843e-014	4,9976	143,
Contact Region 39	Target	Bonded	Inactive	N/A	N/A	N/A	N/A	N/A	N/A	144,
Contact Region 40	Contact	Bonded	Closed	26,	4,7339e-027	0,	2,2737e-013	2,2737e-013	4,9982	145,
Contact Region 40	Target	Bonded	Inactive	N/A	N/A	N/A	N/A	N/A	N/A	146,
Contact Region 41	Contact	Bonded	Closed	44,	8,048e-028	0,	2,2737e-013	6,8212e-013	4,9407	147,
Contact Region 41	Target	Bonded	Inactive	N/A	N/A	N/A	N/A	N/A	N/A	148,

Contact Region 42	Contact	Bonded	Closed	44,	5,4329e-027	0,	4,5475e-013	9,0949e-013	4,9945	149,
Contact Region 42	Target	Bonded	Inactive	N/A	N/A	N/A	N/A	N/A	N/A	150,
Contact Region 43	Contact	Bonded	Closed	44,	1,9191e-027	0,	2,2737e-013	2,2737e-013	4,9978	151,
Contact Region 43	Target	Bonded	Inactive	N/A	N/A	N/A	N/A	N/A	N/A	152,

TABLE 11
Model (B4, C4) > Connections > Contact Tool > Results

Object Name	*Status*
State	Solved
Definition	
Type	Status
Identifier	
Suppressed	No
Integration Point Results	
Display Option	Averaged
Information	
Time	0, s
Load Step	1
Substep	1
Iteration Number	1

FIGURE 3
Model (B4, C4) > Connections > Contact Tool > Status

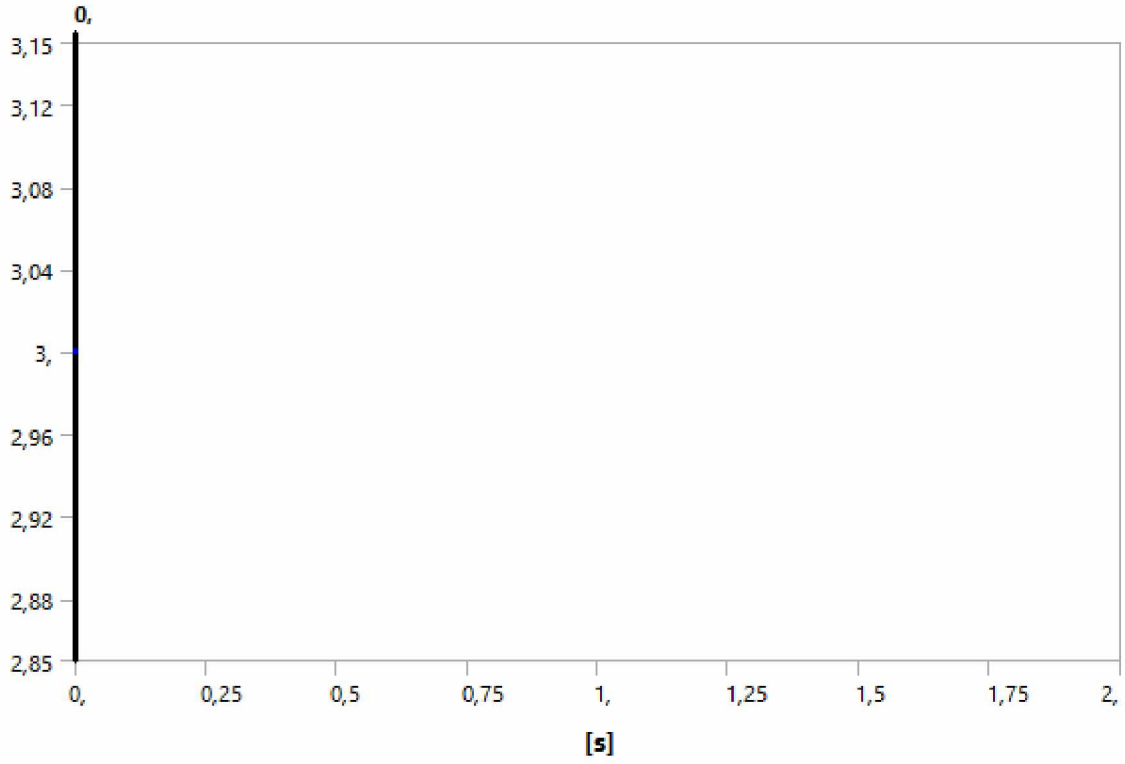

TABLE 12
Model (B4, C4) > Connections > Contact Tool > Status

Minimum [s]	Maximum	Average
0,	3,	3,

FIGURE 4
Model (B4, C4) > Connections > Contact Tool > Status > Image

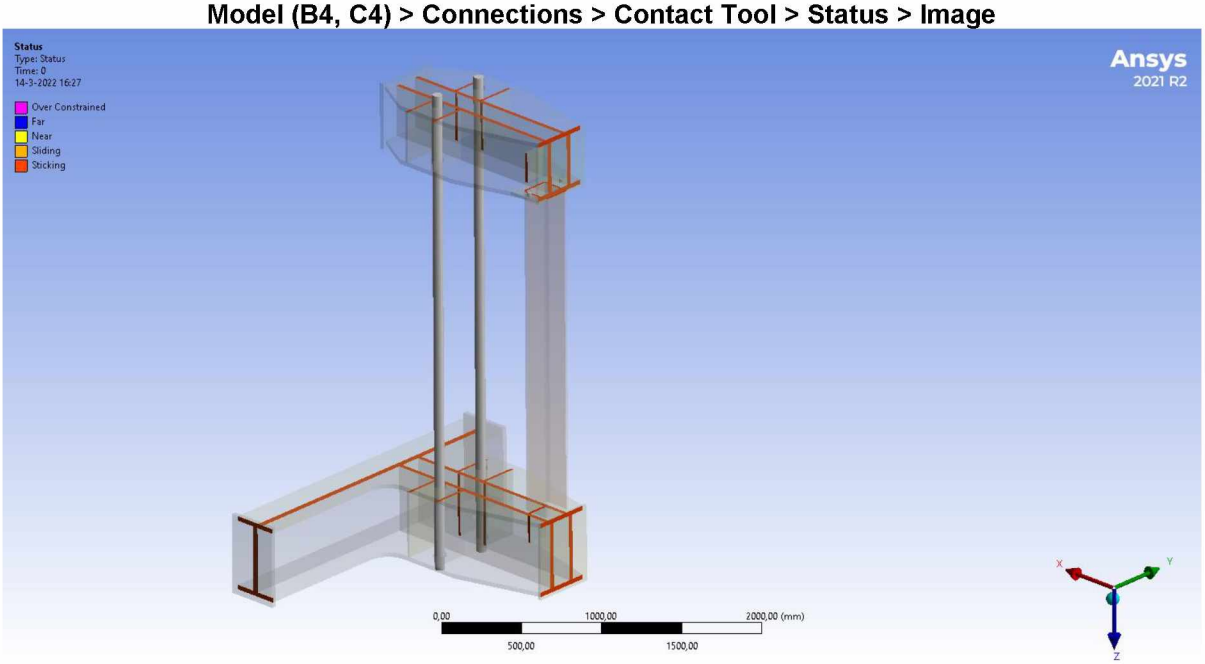

FIGURE 5
Model (B4, C4) > Connections > Contact Tool > Status > Image

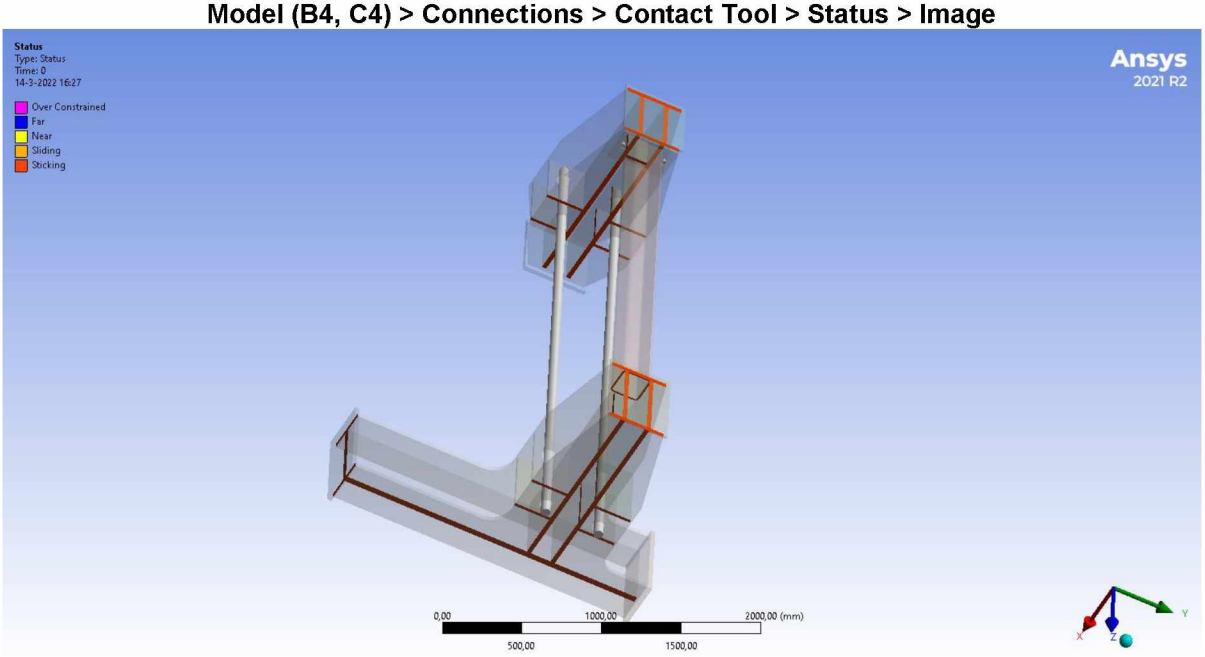

TABLE 13
Model (B4, C4) > Connections > Contact Tools

Object Name	*Contact Tool 2*
State	Solved
Scope	
Scoping Method	Worksheet

Model (B4, C4) > Connections > Contact Tool 2

Name	Contact Side
Frictional - Solid1215\Solid1211 To Solid1\Solid1	Both
Frictional - AandrukPlaatBot\Solid1 To Solid12252\Solid1221121	Both
Frictional - AandrukplaatTop\Solid To Solid1225\Solid122111	Both

TABLE 14
Model (B4, C4) > Connections > Contact Tool 2 > Contact Data Tables

Object Name	*Initial Information*
State	Solved

Model (B4, C4) > Connections > Contact Tool 2 > Initial Information

Name	Contact Side	Type	Status	Number Contacting	Penetration (mm)	Gap (mm)	Geometric Penetration (mm)	Geometric Gap (mm)	Resulting Pinball (mm)	Real Constant
Frictional - Solid1215\Solid1211 To Solid1\Solid1	Contact	Frictional	Inactive	N/A	N/A	N/A	N/A	N/A	N/A	153,
Frictional - Solid1215\Solid1211 To Solid1\Solid1	Target	Frictional	Closed	216,	4,5475e-013	0,	4,5475e-013	1,0731e-026	10,	154,
Frictional - AandrukPlaatBot\Solid1 To Solid12252\Solid1221121	Contact	Frictional	Closed	905,	3,4106e-013	0,	3,4106e-013	5,4041e-028	17,5	155,
Frictional - AandrukPlaatBot\Solid1 To Solid12252\Solid1221121	Target	Frictional	Inactive	N/A	N/A	N/A	N/A	N/A	N/A	156,
Frictional - AandrukplaatTop\Solid To Solid1225\Solid122111	Contact	Frictional	Closed	571,	9,0949e-013	0,	9,0949e-013	1,0697e-026	17,5	157,
Frictional - AandrukplaatTop\Solid To Solid1225\Solid122111	Target	Frictional	Inactive	N/A	N/A	N/A	N/A	N/A	N/A	158,

TABLE 15
Model (B4, C4) > Connections > Contact Tool 2 > Results

Object Name	*Status*
State	Solved
Definition	
Type	Status
Identifier	
Suppressed	No
Integration Point Results	
Display Option	Averaged
Information	
Time	0, s
Load Step	1
Substep	1
Iteration Number	1

FIGURE 6
Model (B4, C4) > Connections > Contact Tool 2 > Status

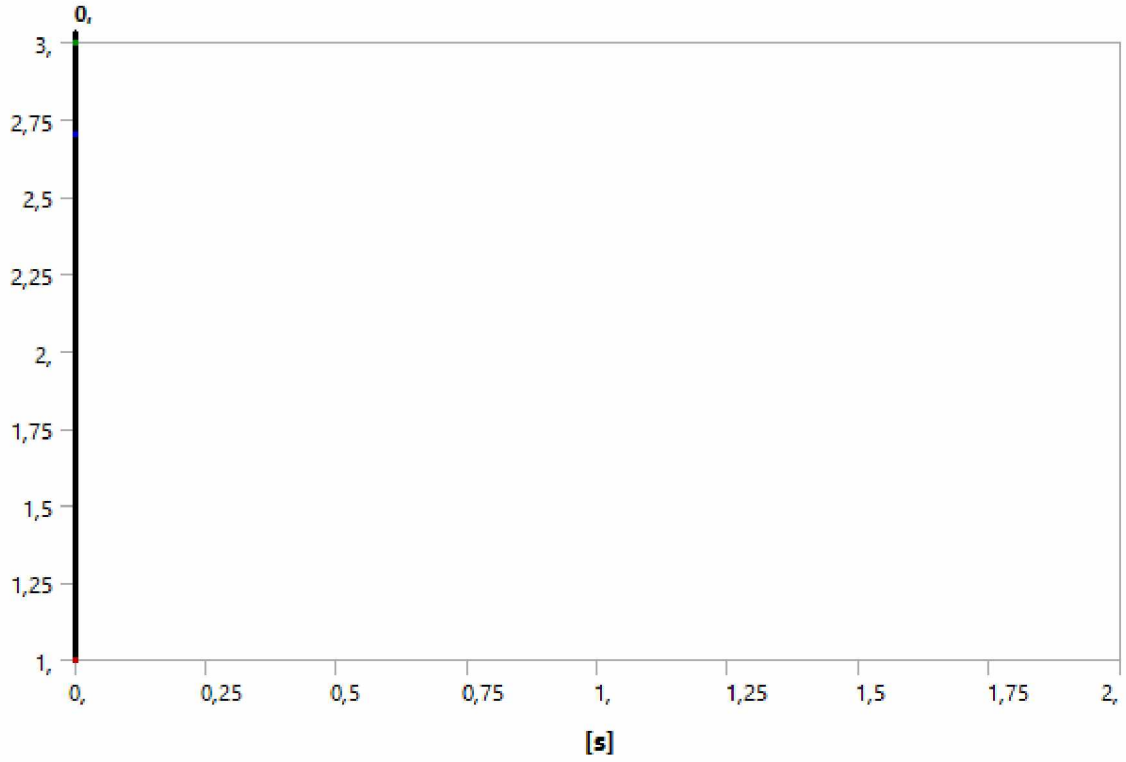

TABLE 16
Model (B4, C4) > Connections > Contact Tool 2 > Status

Minimum [s]	Maximum	Average
0,	1,	3,

FIGURE 7
Model (B4, C4) > Connections > Contact Tool 2 > Status > Image

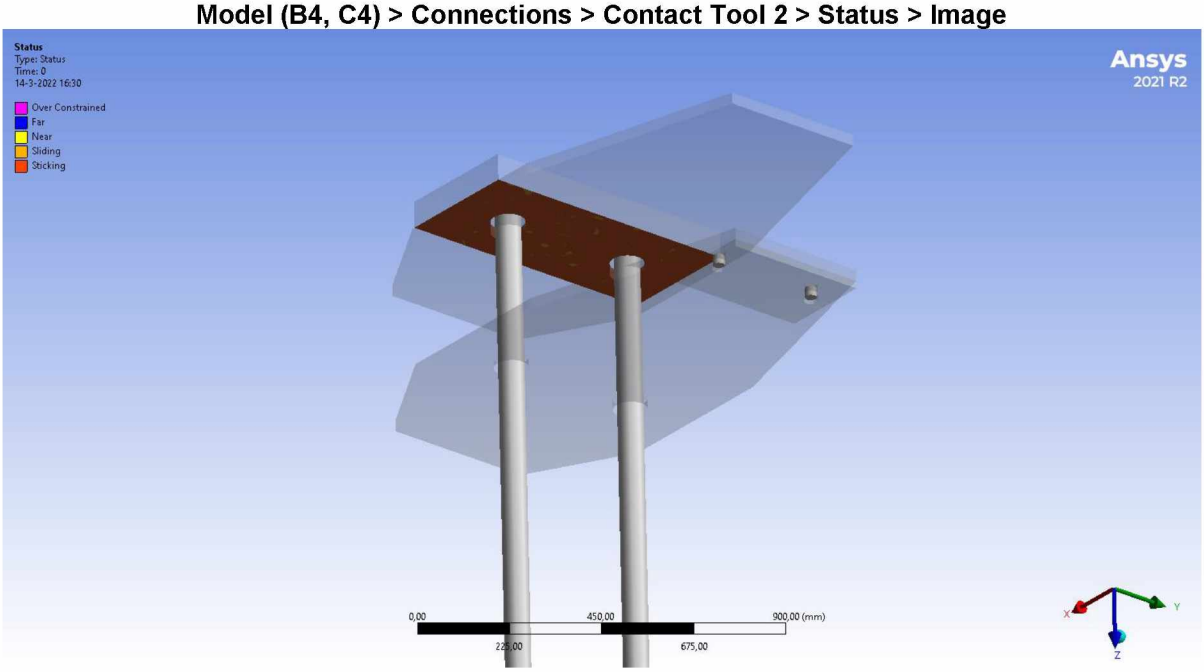

FIGURE 8
Model (B4, C4) > Connections > Contact Tool 2 > Status > Image

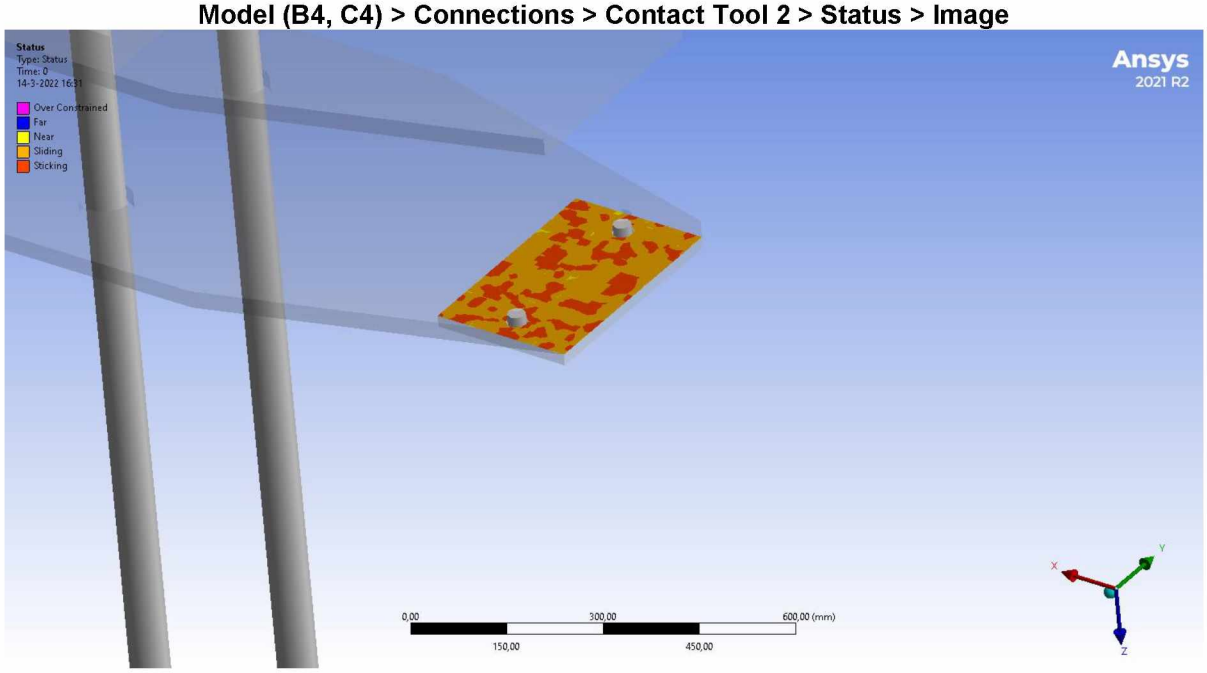

FIGURE 9
Model (B4, C4) > Connections > Contact Tool 2 > Status > Image

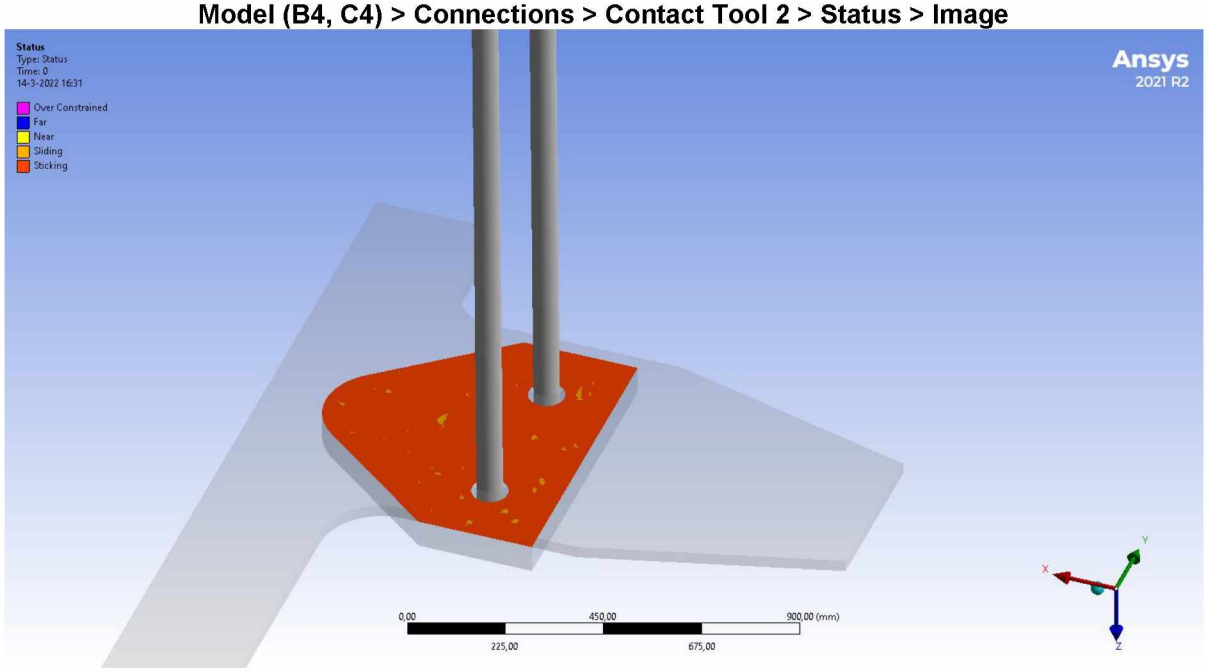

TABLE 17
Model (B4, C4) > Connections > Circular - Solid1215\Solid1211 To Solid1\Solid1

Object Name	*Circular - Solid1215\Solid1211 To Solid1\Solid1*	*Circular - Solid1215\Solid1211 To Solid1\Solid1*
State	Fully Defined	Fully Defined
Graphics Properties		
Visible	Yes	Yes
Definition		
Material	Structural Steel S355	Structural Steel S355
Cross Section	Circular	Circular
Radius	15, mm	15, mm

Suppressed	No	No
Beam Length	25, mm	25, mm
Element APDL Name		
Scope		
Scope	Body-Body	Body-Body
Reference		
Scoping Method	Geometry Selection	Geometry Selection
Applied By	Remote Attachment	Remote Attachment
Scope	1 Face	1 Face
Body	Solid1215\Solid1211	Solid1215\Solid1211
Coordinate System	Global Coordinate System	Global Coordinate System
Reference X Coordinate	-850, mm	-850, mm
Reference Y Coordinate	-1594,7 mm	-1884,7 mm
Reference Z Coordinate	-1994,5 mm	-1994,5 mm
Reference Location	Defined	Defined
Behavior	Rigid	Rigid
Pinball Region	All	All
Mobile		
Scoping Method	Geometry Selection	Geometry Selection
Applied By	Remote Attachment	Remote Attachment
Scope	1 Face	1 Face
Body	Solid1\Solid1	Solid1\Solid1
Coordinate System	Global Coordinate System	Global Coordinate System
Mobile X Coordinate	-850, mm	-850, mm
Mobile Y Coordinate	-1594,7 mm	-1884,7 mm
Mobile Z Coordinate	-1969,5 mm	-1969,5 mm
Mobile Location	Defined	Defined
Behavior	Rigid	Rigid
Pinball Region	All	All

FIGURE 10
Model (B4, C4) > Connections > Circular - Solid1215 > Solid1211 To Solid1 > Solid1 > Image

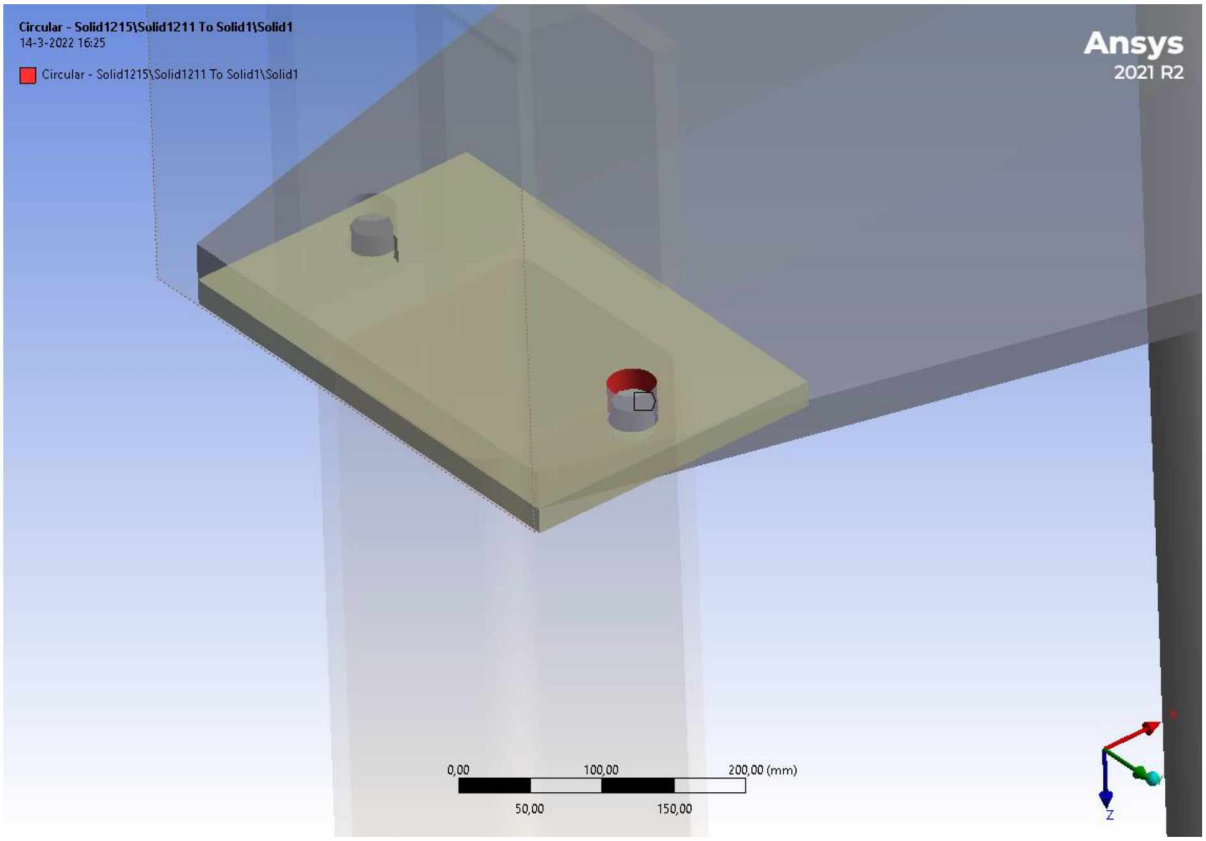

FIGURE 11
Model (B4, C4) > Connections > Circular - Solid1215 > Solid1211 To Solid1 > Solid1 > Image

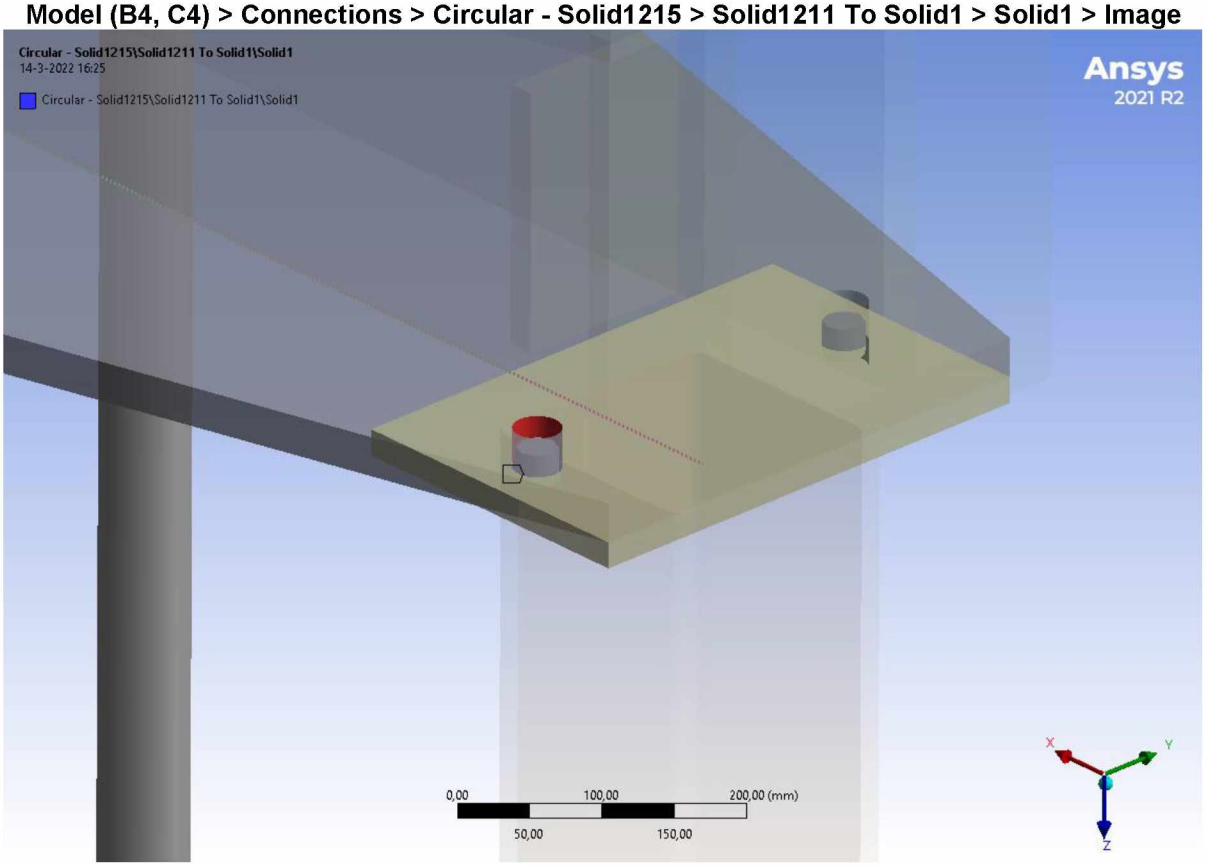

Mesh

TABLE 18
Model (B4, C4) > Mesh

Object Name	*Mesh*
State	Solved
Display	
Display Style	Use Geometry Setting
Defaults	
Physics Preference	Mechanical
Element Order	Quadratic
Element Size	20, mm
Sizing	
Use Adaptive Sizing	Yes
Resolution	Default (2)
Mesh Defeaturing	Yes
Defeature Size	Default
Transition	Fast
Span Angle Center	Coarse
Initial Size Seed	Assembly
Bounding Box Diagonal	4161,1 mm
Average Surface Area	1,082e+005 mm²
Minimum Edge Length	19,635 mm
Quality	
Check Mesh Quality	Yes, Errors
Error Limits	Aggressive Mechanical
Target Quality	Default (0.050000)
Smoothing	Medium
Mesh Metric	None
Inflation	
Use Automatic Inflation	None
Inflation Option	Smooth Transition
Transition Ratio	0,272
Maximum Layers	2
Growth Rate	1,2
Inflation Algorithm	Pre
View Advanced Options	No
Advanced	
Number of CPUs for Parallel Part Meshing	Program Controlled
Straight Sided Elements	No
Rigid Body Behavior	Dimensionally Reduced
Triangle Surface Mesher	Program Controlled
Use Asymmetric Mapped Mesh (Beta)	No
Topology Checking	Yes
Pinch Tolerance	Please Define
Generate Pinch on Refresh	No
Statistics	
Nodes	341413
Elements	60230

FIGURE 12
Model (B4, C4) > Mesh > Image

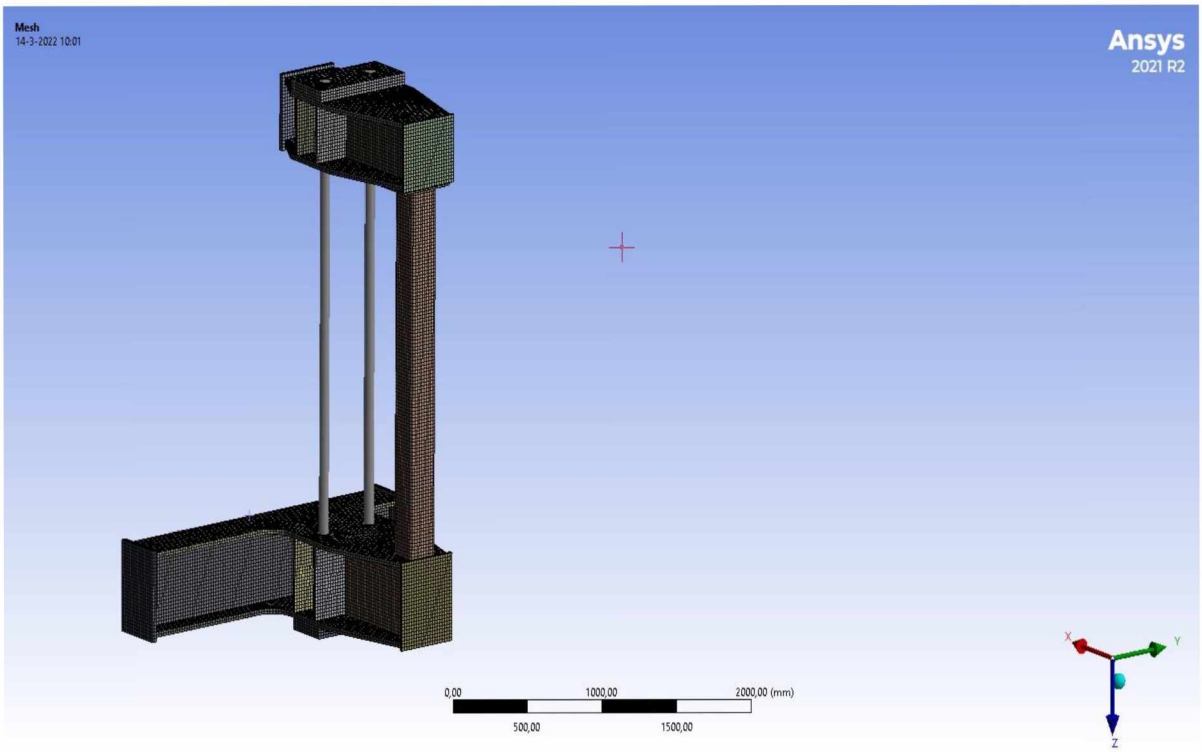

FIGURE 13
Model (B4, C4) > Mesh > Image 2

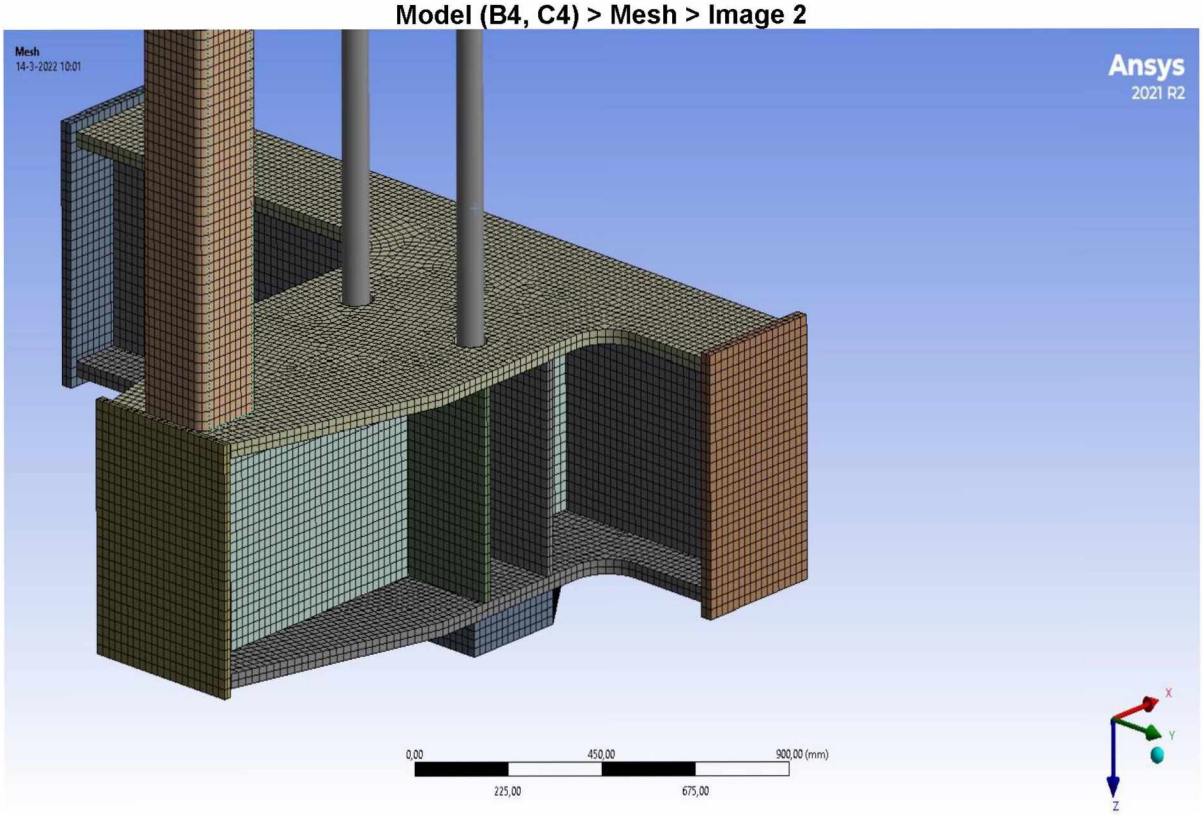

FIGURE 14
Model (B4, C4) > Mesh > Image 3



Static Structural (B5)

TABLE 19
Model (B4, C4) > Analysis

Object Name	*Static Structural (B5)*
State	Solved
Definition	
Physics Type	Structural
Analysis Type	Static Structural
Solver Target	Mechanical APDL
Options	
Environment Temperature	22, °C
Generate Input Only	No

TABLE 20
Model (B4, C4) > Static Structural (B5) > Accelerations

Object Name	*Standard Earth Gravity*
State	Fully Defined
Scope	
Geometry	All Bodies
Definition	
Coordinate System	Global Coordinate System
X Component	0, mm/s² (ramped)
Y Component	0, mm/s² (ramped)
Z Component	9806,6 mm/s² (ramped)
Suppressed	No
Direction	+Z Direction

FIGURE 15
Model (B4, C4) > Static Structural (B5) > Standard Earth Gravity

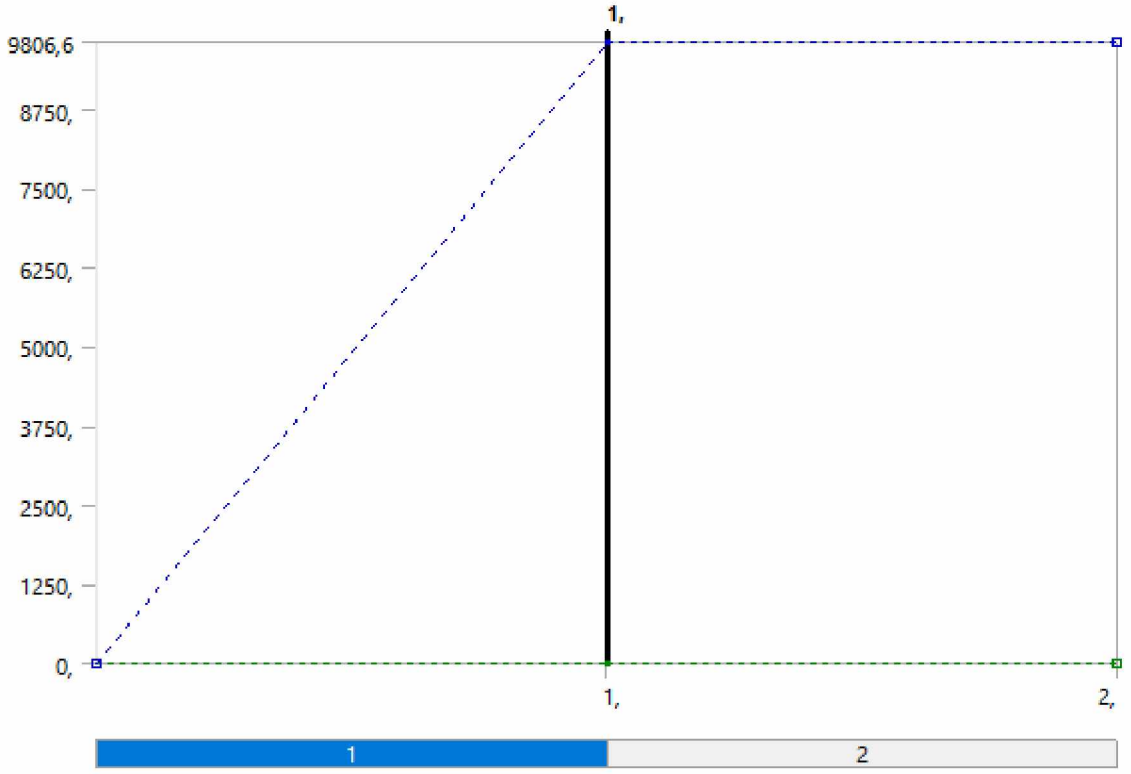

FIGURE 16
Model (B4, C4) > Static Structural (B5) > Standard Earth Gravity > Image

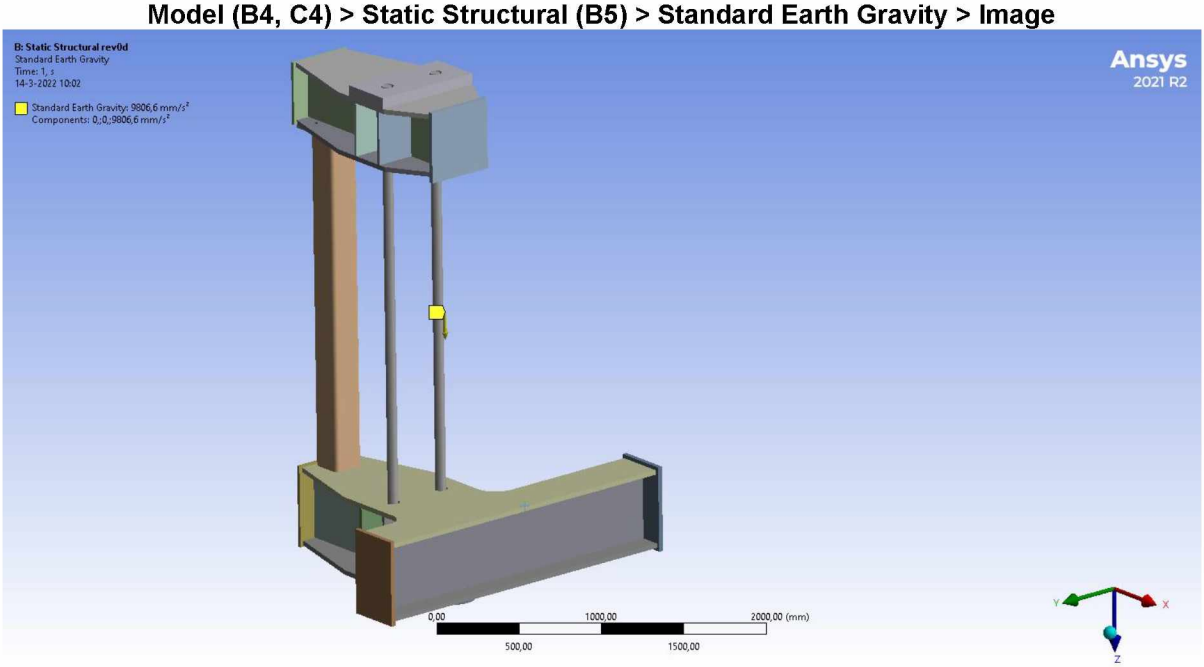

TABLE 21
Model (B4, C4) > Static Structural (B5) > Loads

Object Name	*Remote Displacement*	*Remote Displacement 2*
State	Fully Defined	Fully Defined
Scope		
Scoping Method	Geometry Selection	Geometry Selection
Geometry	1 Face	1 Face
Coordinate System	Global Coordinate System	Global Coordinate System

X Coordinate	350, mm	350, mm
Y Coordinate	-1739,7 mm	-1039,7 mm
Z Coordinate	-1949,5 mm	200,54 mm
Location	Defined	Defined
Definition		
ID (Beta)	434	437
Type	Remote Displacement	Remote Displacement
X Component	0, mm (ramped)	0, mm (ramped)
Y Component	0, mm (ramped)	0, mm (ramped)
Z Component	0, mm (ramped)	0, mm (ramped)
Rotation X	0, ° (ramped)	
Rotation Y	Free	
Rotation Z	Free	
Suppressed	No	No
Behavior	Deformable	Deformable
Rotation X		Free
Rotation Y		0, ° (ramped)
Rotation Z		Free
Advanced		
Pinball Region	All	All

FIGURE 17
Model (B4, C4) > Static Structural (B5) > Remote Displacement

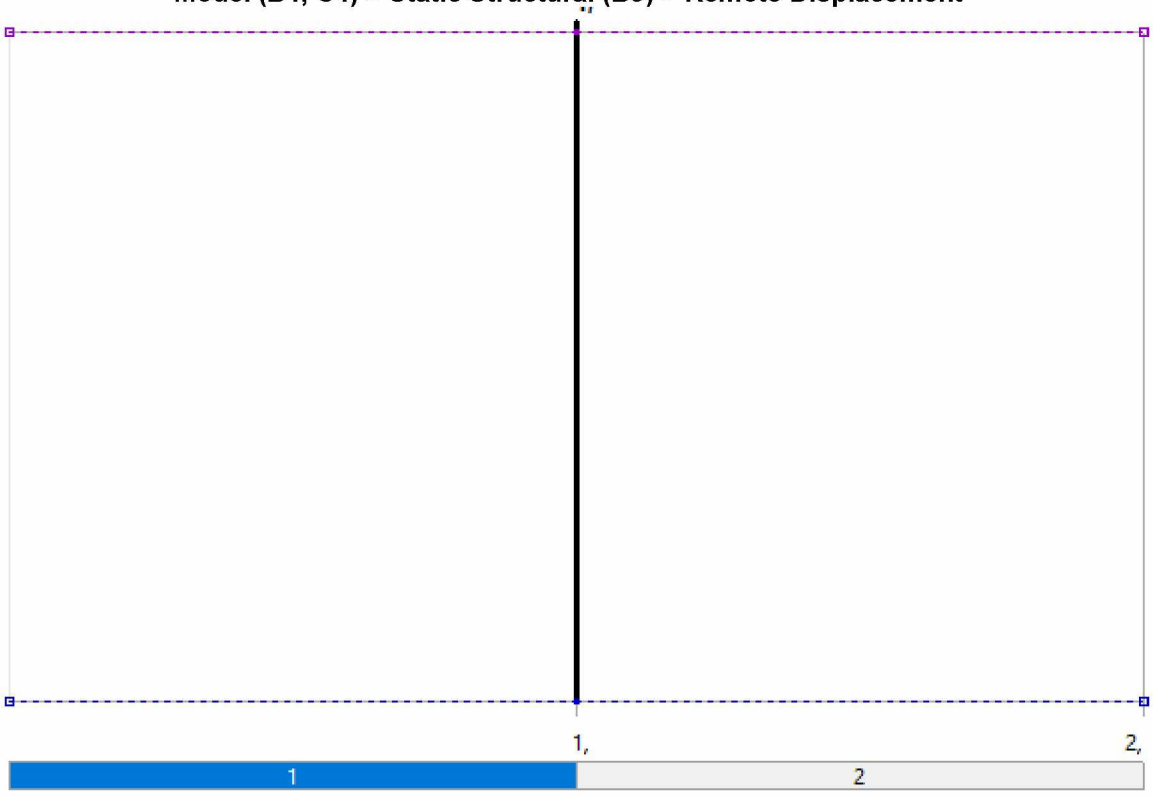

FIGURE 18
Model (B4, C4) > Static Structural (B5) > Remote Displacement 2

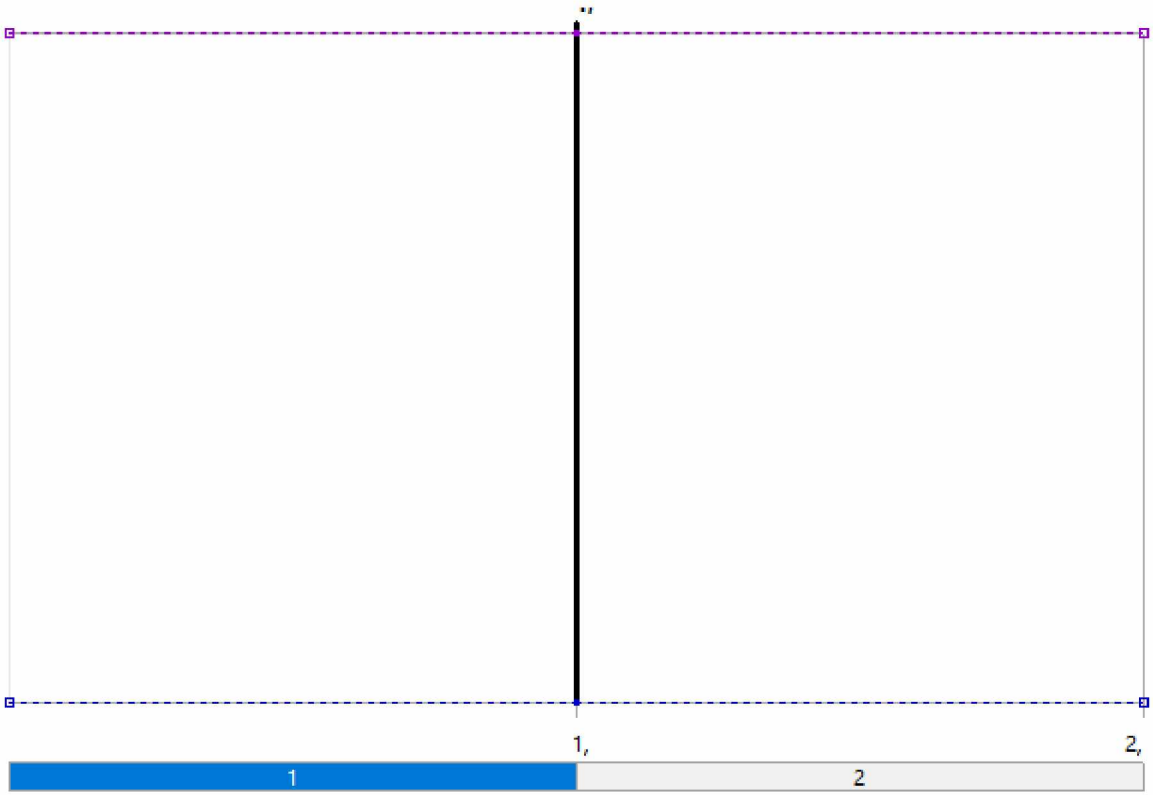

TABLE 22
Model (B4, C4) > Static Structural (B5) > Loads

Object Name	*Remote Displacement 3*
State	Fully Defined
Scope	
Scoping Method	Geometry Selection
Geometry	1 Face
Coordinate System	Global Coordinate System
X Coordinate	350, mm
Y Coordinate	-3139,7 mm
Z Coordinate	200,54 mm
Location	Defined
Definition	
ID (Beta)	440
Type	Remote Displacement
X Component	0, mm (ramped)
Y Component	Free
Z Component	0, mm (ramped)
Rotation X	Free
Rotation Y	0, ° (ramped)
Rotation Z	Free
Suppressed	No
Behavior	Deformable
Advanced	
Pinball Region	All

FIGURE 19
Model (B4, C4) > Static Structural (B5) > Remote Displacement 3

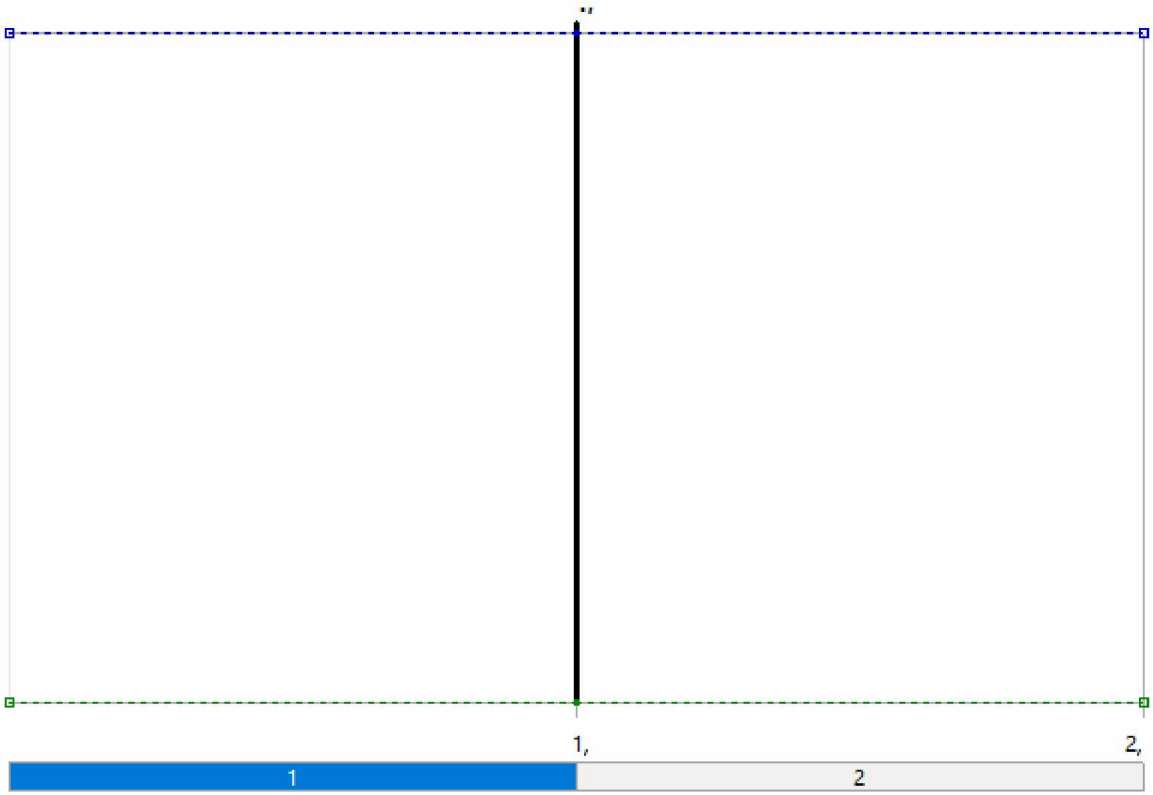

TABLE 23
Model (B4, C4) > Static Structural (B5) > Bolt Pretension

Object Name	*Bolt Pretension*	*Bolt Pretension 2*
State	Fully Defined	Fully Defined
Scope		
Scoping Method	Beam Connection	Beam Connection
Beam Connection	Circular - AandrukplaatTop\Solid To AandrukPlaatBot\Solid1	Circular - AandrukplaatTop\Solid To AandrukPlaatBot\Solid1
Definition		
ID (Beta)	443	444
Type	Bolt Pretension	Bolt Pretension
Suppressed	No	No
Formulation	Program Controlled	Program Controlled
Define By	Load	Load
Preload	2,3e+006 N	2,3e+006 N

FIGURE 20
Model (B4, C4) > Static Structural (B5) > Bolt Pretension

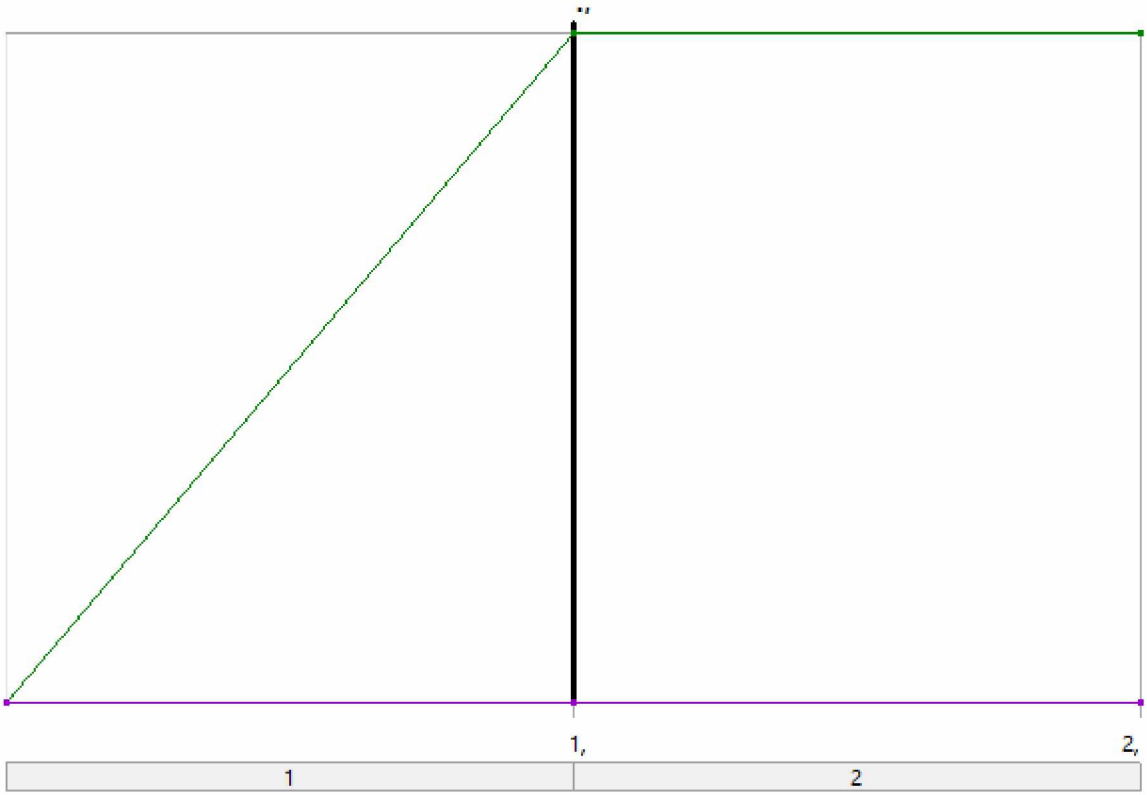

TABLE 24
Model (B4, C4) > Static Structural (B5) > Bolt Pretension

Steps	Define By	Preload [N]
1,	Load	2,3e+006
2,	Lock	N/A

FIGURE 21
Model (B4, C4) > Static Structural (B5) > Bolt Pretension 2

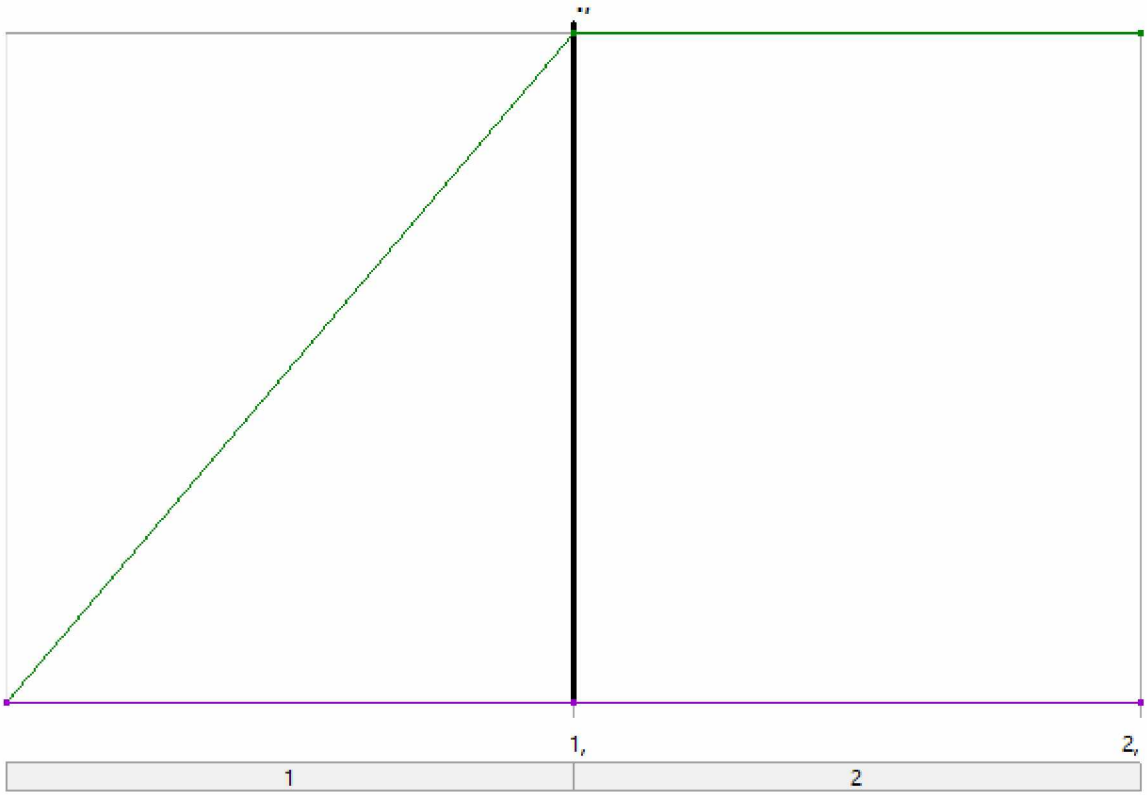

TABLE 25
Model (B4, C4) > Static Structural (B5) > Bolt Pretension 2

Steps	Define By	Preload [N]
1,	Load	2,3e+006
2,	Lock	N/A

Solution (B6)

TABLE 26
Model (B4, C4) > Static Structural (B5) > Solution

Object Name	*Solution (B6)*
State	Solved
Solution	
Number Of Cores to Use (Beta)	Solve Process Settings
Adaptive Mesh Refinement	
Max Refinement Loops	1,
Refinement Depth	2,
Information	
Status	Done
MAPDL Elapsed Time	3 m 43 s
MAPDL Memory Used	13,64 GB
MAPDL Result File Size	168,56 MB
Post Processing	
Distributed Post Processing (Beta)	Program Controlled
Mesh Source (Beta)	Program Controlled
Beam Section Results	No
On Demand Stress/Strain	No

TABLE 27
Model (B4, C4) > Static Structural (B5) > Solution (B6) > Results

Object Name	*Total Deformation*	*Equivalent Stress*
State	Solved	Solved
Scope		
Scoping Method	Geometry Selection	Geometry Selection
Geometry	All Bodies	All Bodies
Definition		
Type	Total Deformation	Equivalent (von-Mises) Stress
By	Time	Time
Display Time	Last	Last
Calculate Time History	Yes	Yes
Identifier		
Suppressed	No	No
Results		
Minimum	5,6514e-003 mm	0,23471 MPa
Maximum	4,2342 mm	544,47 MPa
Average	2,0172 mm	113,32 MPa
Minimum Occurs On	Component873\Solid	MesPlaat1400\Solid
Maximum Occurs On	AandrukPlaatBot\Solid1	AandrukPlaatBot\Solid1
Minimum Value Over Time		
Minimum	5,6514e-003 mm	0,10367 MPa
Maximum	5,895e-003 mm	0,23471 MPa
Maximum Value Over Time		
Minimum	4,2308 mm	542,83 MPa
Maximum	4,2342 mm	544,47 MPa
Information		
Time	2, s	2, s
Load Step	2	2
Substep	1	1
Iteration Number	6	6
Integration Point Results		
Display Option		Averaged
Average Across Bodies		No

FIGURE 22
Model (B4, C4) > Static Structural (B5) > Solution (B6) > Total Deformation

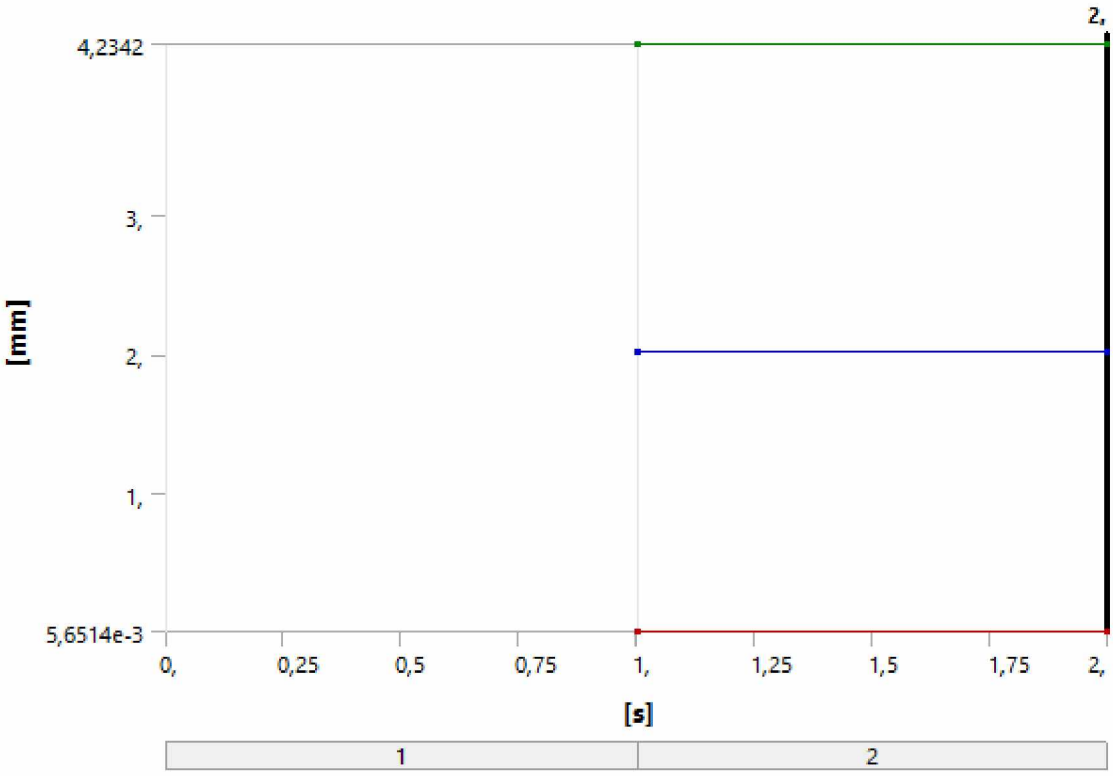

TABLE 28
Model (B4, C4) > Static Structural (B5) > Solution (B6) > Total Deformation

Time [s]	Minimum [mm]	Maximum [mm]
1,	5,895e-003	4,2308
2,	5,6514e-003	4,2342

FIGURE 23
Model (B4, C4) > Static Structural (B5) > Solution (B6) > Total Deformation > Image

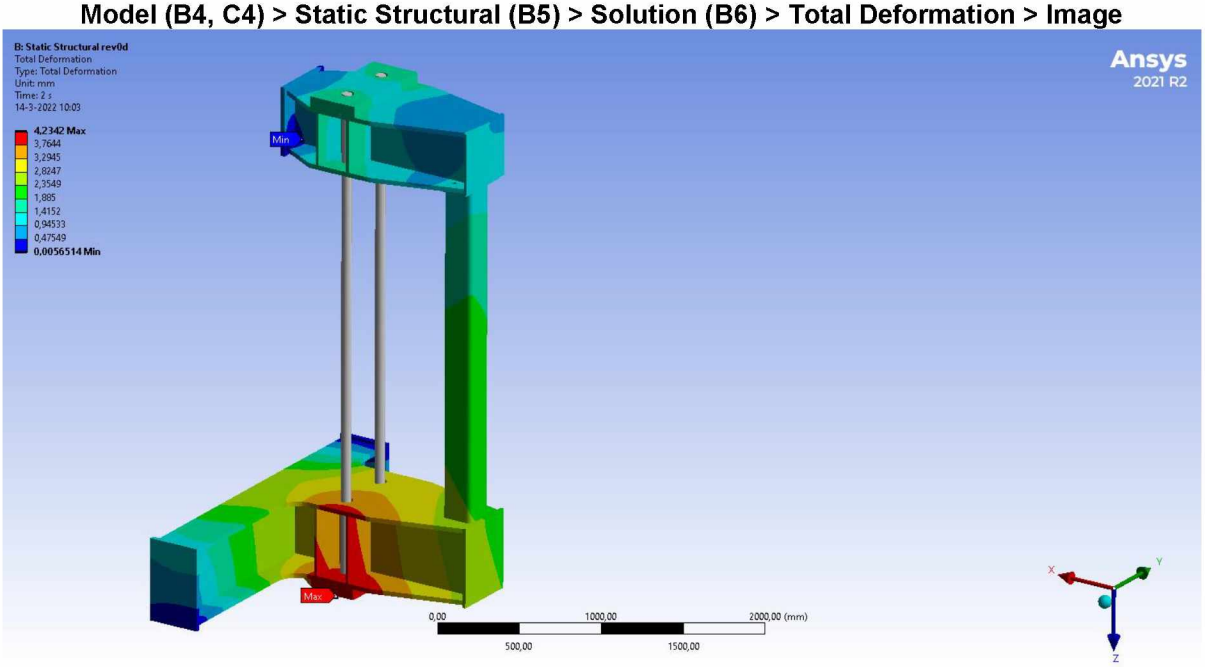

FIGURE 24
Model (B4, C4) > Static Structural (B5) > Solution (B6) > Equivalent Stress

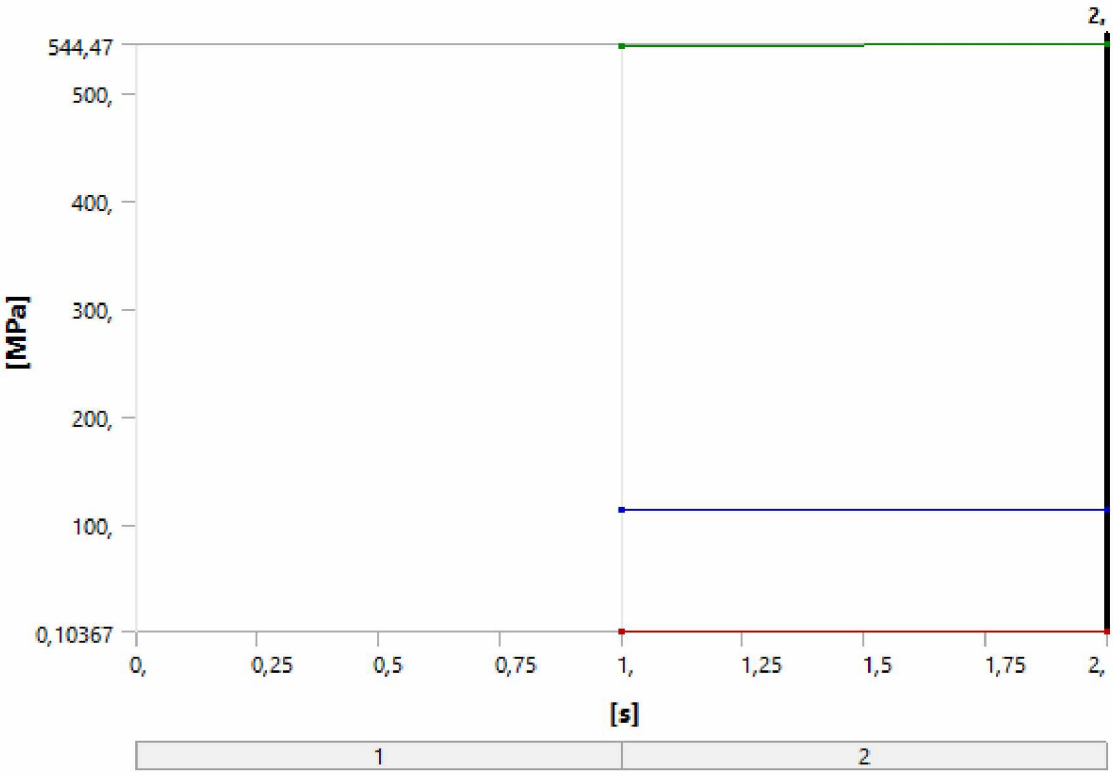

TABLE 29
Model (B4, C4) > Static Structural (B5) > Solution (B6) > Equivalent Stress

Time [s]	Minimum [MPa]	Maximum [MPa]
1,	0,10367	542,83
2,	0,23471	544,47

FIGURE 25
Model (B4, C4) > Static Structural (B5) > Solution (B6) > Equivalent Stress > Image

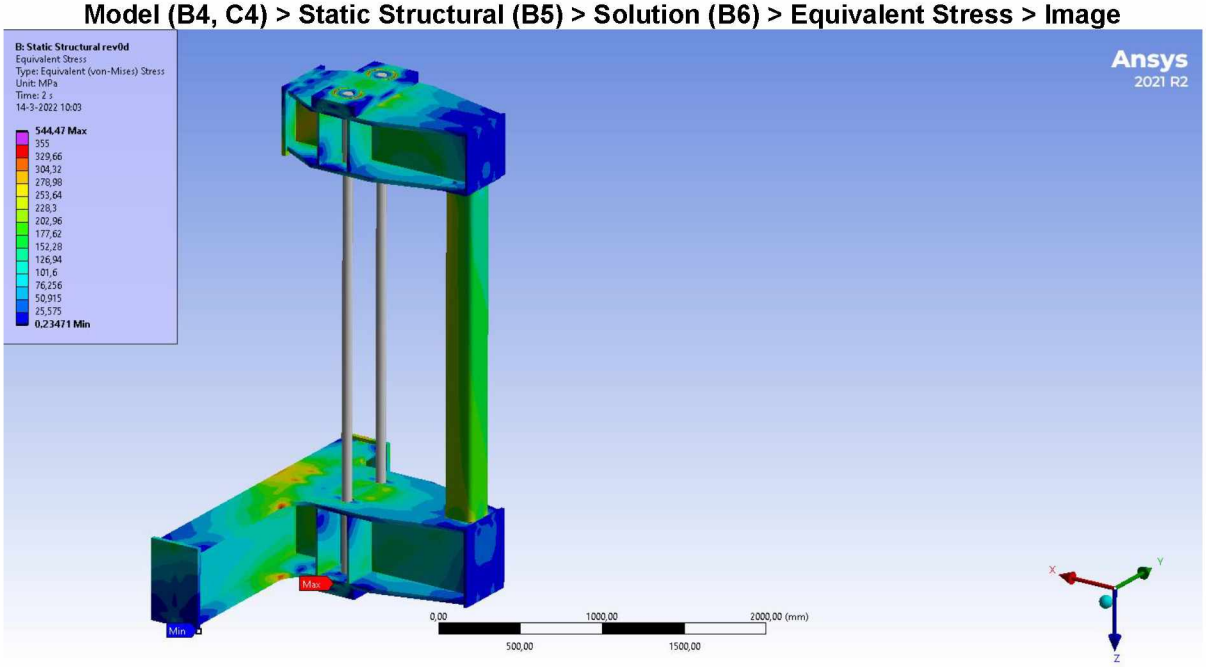

FIGURE 26
Model (B4, C4) > Static Structural (B5) > Solution (B6) > Equivalent Stress > Image

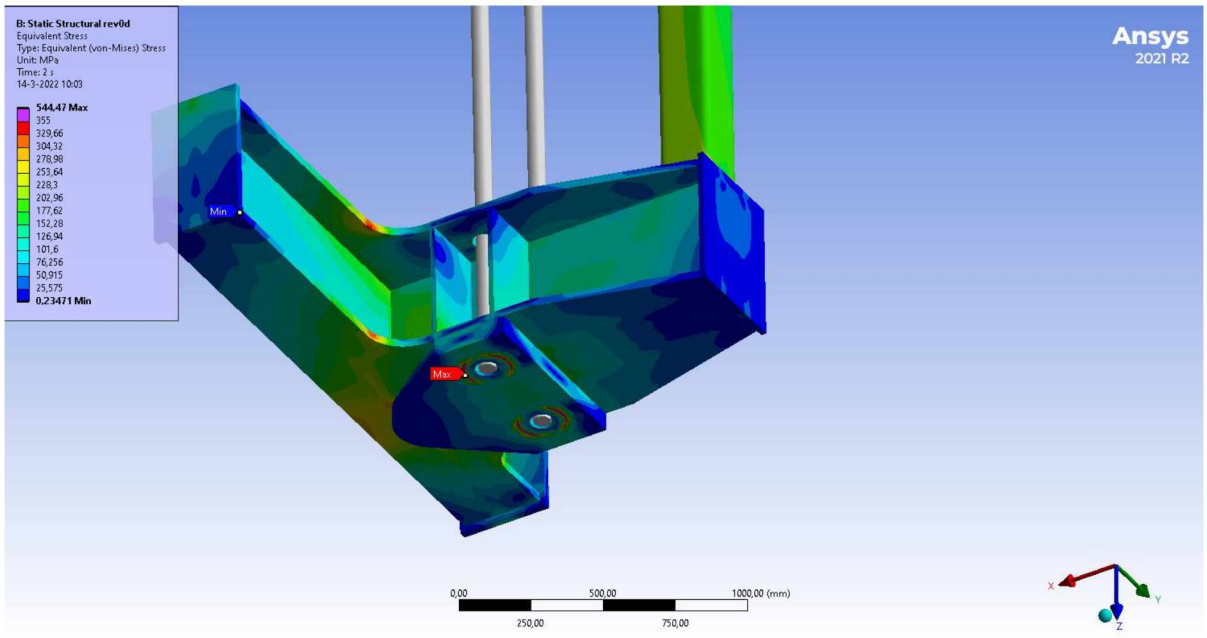

FIGURE 27
Model (B4, C4) > Static Structural (B5) > Solution (B6) > Equivalent Stress > Image

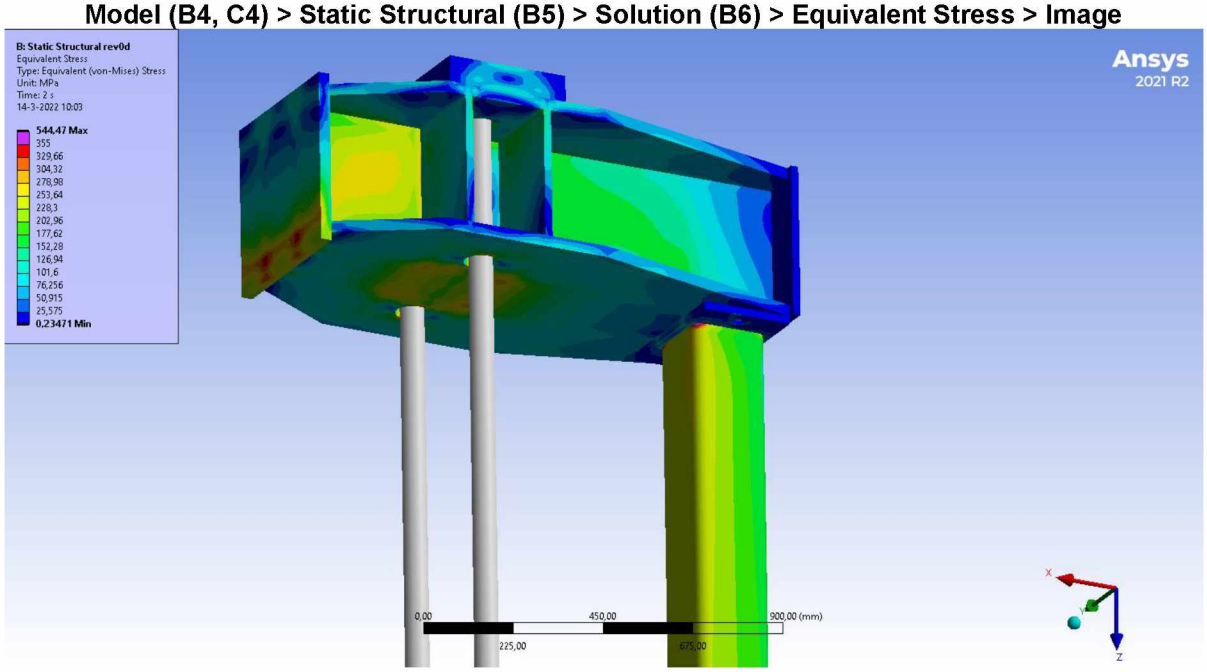

TABLE 30
Model (B4, C4) > Static Structural (B5) > Solution (B6) > Results

Object Name	*Equivalent Stress 2*
State	Solved
Scope	
Scoping Method	Geometry Selection
Geometry	26 Bodies
Definition	
Type	Equivalent (von-Mises) Stress
By	Time
Display Time	Last
Calculate Time History	Yes

Identifier	
Suppressed	No
Integration Point Results	
Display Option	Averaged
Average Across Bodies	No
Results	
Minimum	0,23471 MPa
Maximum	408,29 MPa
Average	117,44 MPa
Minimum Occurs On	MesPlaat1400\Solid
Maximum Occurs On	Component87253\Solid1
Minimum Value Over Time	
Minimum	0,23401 MPa
Maximum	0,23471 MPa
Maximum Value Over Time	
Minimum	408,29 MPa
Maximum	408,4 MPa
Information	
Time	2, s
Load Step	2
Substep	1
Iteration Number	6

FIGURE 28
Model (B4, C4) > Static Structural (B5) > Solution (B6) > Equivalent Stress 2

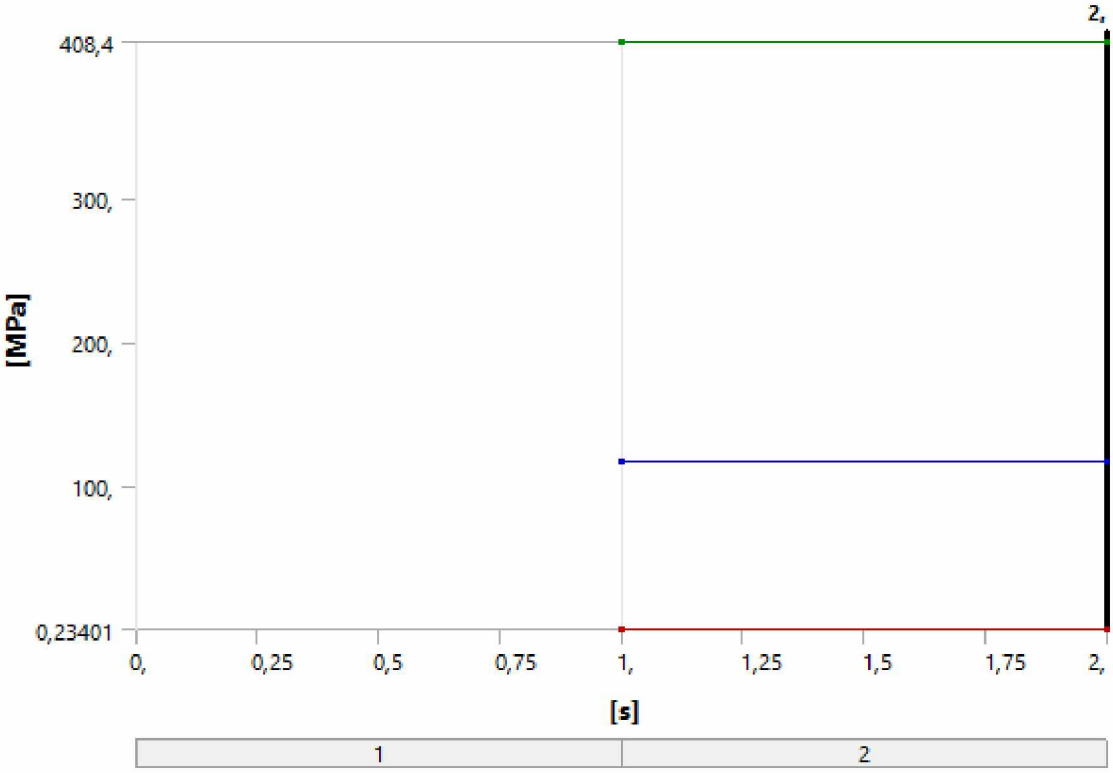

TABLE 31
Model (B4, C4) > Static Structural (B5) > Solution (B6) > Equivalent Stress 2

Time [s]	Minimum [MPa]	Maximum [MPa]
1,	0,23401	408,4

2,	0,23471	408,29

FIGURE 29
Model (B4, C4) > Static Structural (B5) > Solution (B6) > Equivalent Stress 2 > Image

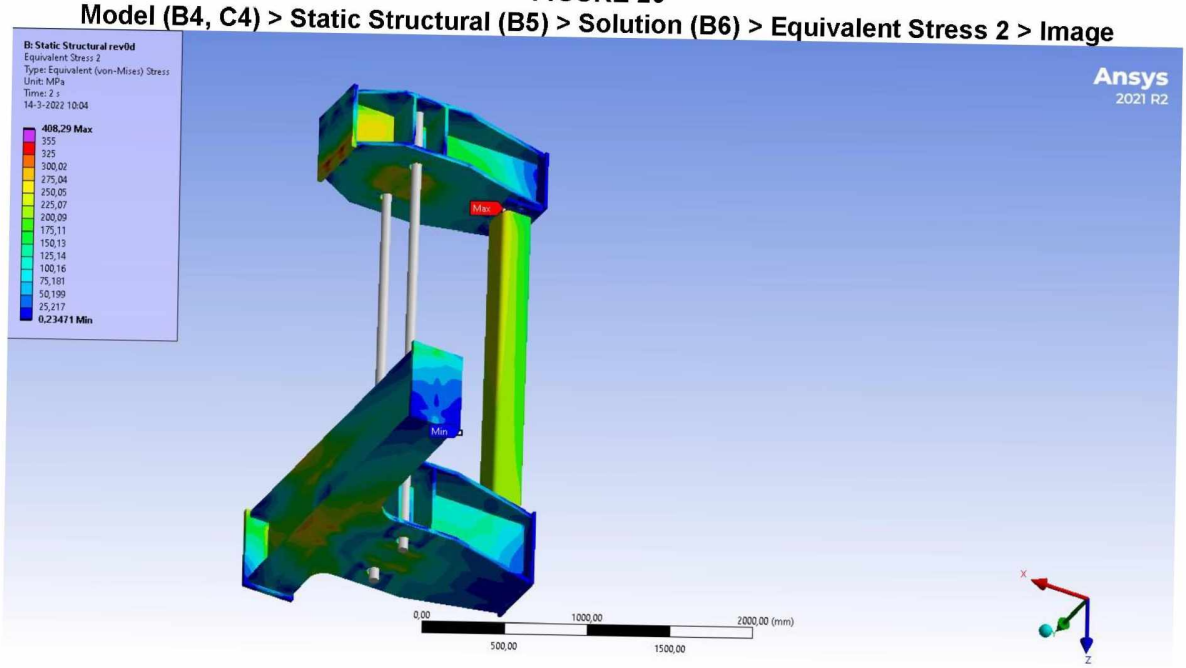

FIGURE 30
Model (B4, C4) > Static Structural (B5) > Solution (B6) > Equivalent Stress 2 > Image

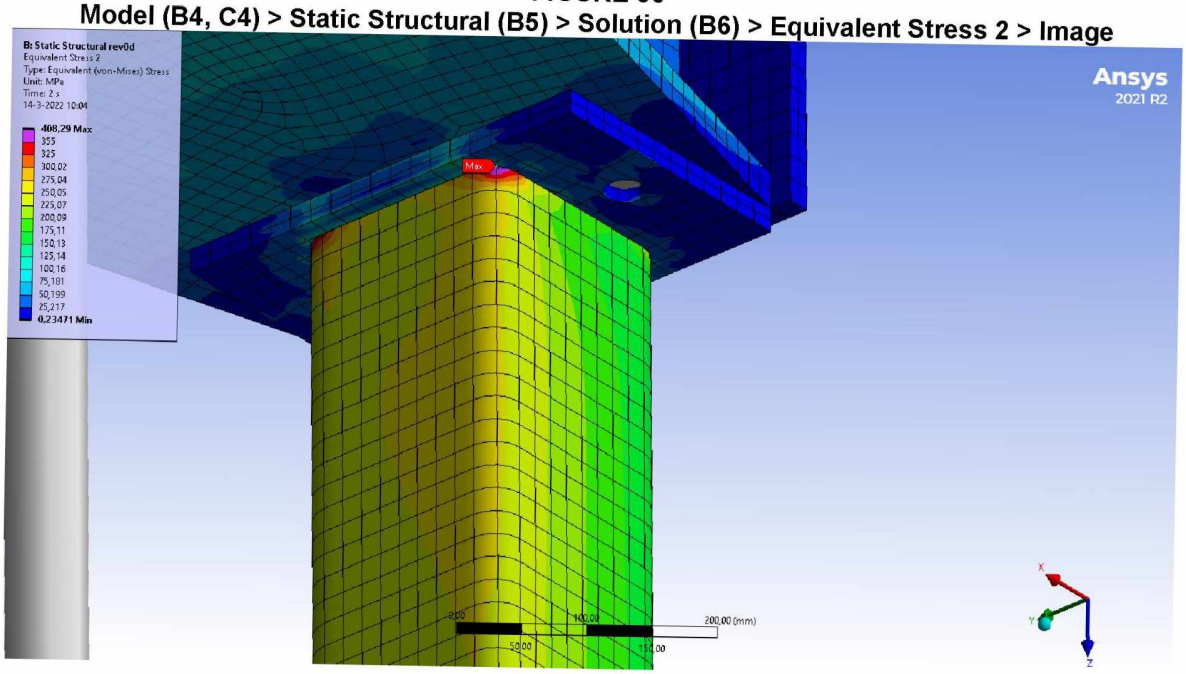

FIGURE 31
Model (B4, C4) > Static Structural (B5) > Solution (B6) > Equivalent Stress 2 > Image

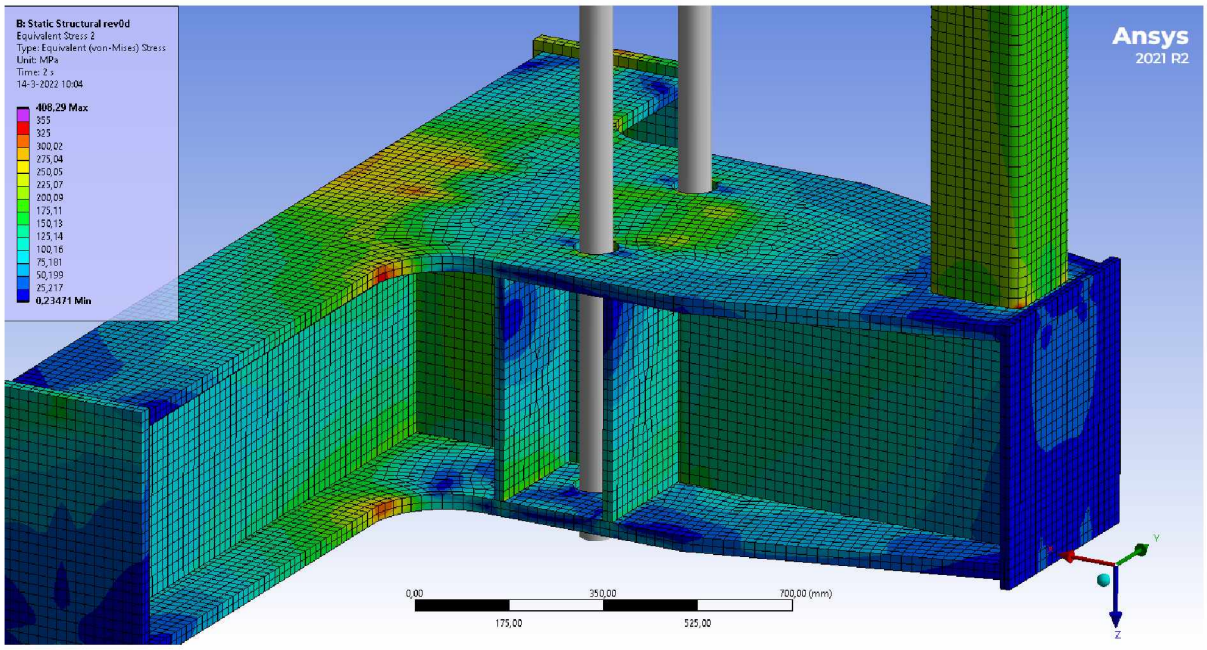

TABLE 32
Model (B4, C4) > Static Structural (B5) > Solution (B6) > Contact Tools

Object Name	*Contact Tool*
State	Solved
Scope	
Scoping Method	Worksheet

Model (B4, C4) > Static Structural (B5) > Solution (B6) > Contact Tool

Name	Contact Side
Contact Region	Both
Contact Region 2	Both
Contact Region 3	Both
Contact Region 4	Both
Contact Region 5	Both
Contact Region 6	Both
Contact Region 7	Both
Contact Region 8	Both
Contact Region 10	Both
Contact Region 11	Both
Contact Region 12	Both
Contact Region 13	Both
Contact Region 14	Both
Contact Region 15	Both
Contact Region 16	Both
Contact Region 17	Both
Contact Region 18	Both
Contact Region 19	Both
Contact Region 20	Both
Contact Region 21	Both
Contact Region 23	Both
Contact Region 24	Both
Contact Region 25	Both
Contact Region 26	Both

Contact Region	Both
Contact Region 2	Both
Contact Region 3	Both
Contact Region 4	Both
Contact Region 5	Both
Contact Region 6	Both
Contact Region 7	Both
Contact Region 8	Both
Contact Region 10	Both
Contact Region 12	Both
Contact Region 13	Both
Contact Region 14	Both
Contact Region 15	Both
Contact Region 16	Both
Contact Region 18	Both
Contact Region 19	Both
Contact Region 20	Both
Contact Region 21	Both
Contact Region 22	Both
Contact Region 23	Both
Contact Region 24	Both
Contact Region 26	Both
Contact Region 27	Both
Contact Region 28	Both
Contact Region 29	Both
Contact Region 32	Both
Contact Region 33	Both

TABLE 33
Model (B4, C4) > Static Structural (B5) > Solution (B6) > Contact Tool > Results

Object Name	*Pressure*
State	Solved
Definition	
Type	Pressure
By	Time
Display Time	Last
Calculate Time History	Yes
Identifier	
Suppressed	No
Integration Point Results	
Display Option	Averaged
Results	
Minimum	-176,84 MPa
Maximum	450,98 MPa
Average	27,343 MPa
Minimum Occurs On	Solid1215\Solid1211
Maximum Occurs On	Component87253\Solid1
Minimum Value Over Time	
Minimum	-186,32 MPa
Maximum	-176,84 MPa
Maximum Value Over Time	
Minimum	450,98 MPa

Maximum	451,09 MPa
Information	
Time	2, s
Load Step	2
Substep	1
Iteration Number	6

FIGURE 32
Model (B4, C4) > Static Structural (B5) > Solution (B6) > Contact Tool > Pressure

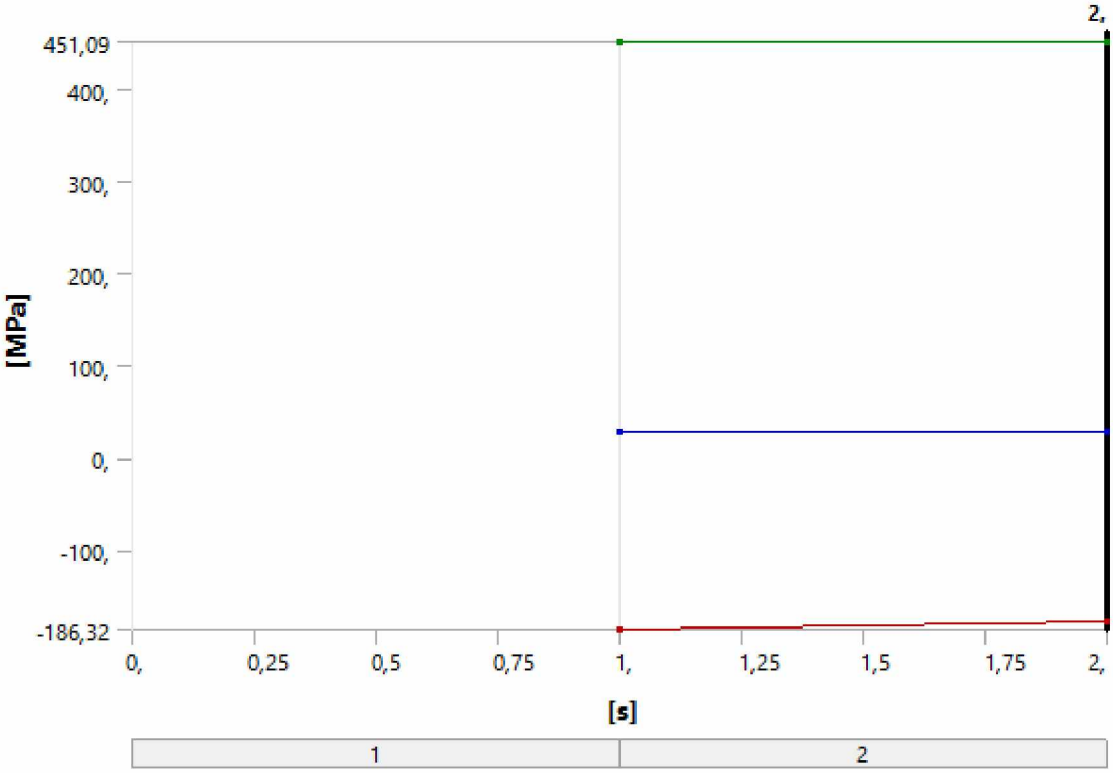

TABLE 34
Model (B4, C4) > Static Structural (B5) > Solution (B6) > Contact Tool > Pressure

Time [s]	Minimum [MPa]	Maximum [MPa]
1,	-186,32	451,09
2,	-176,84	450,98

FIGURE 33
Model (B4, C4) > Static Structural (B5) > Solution (B6) > Contact Tool > Pressure > Image

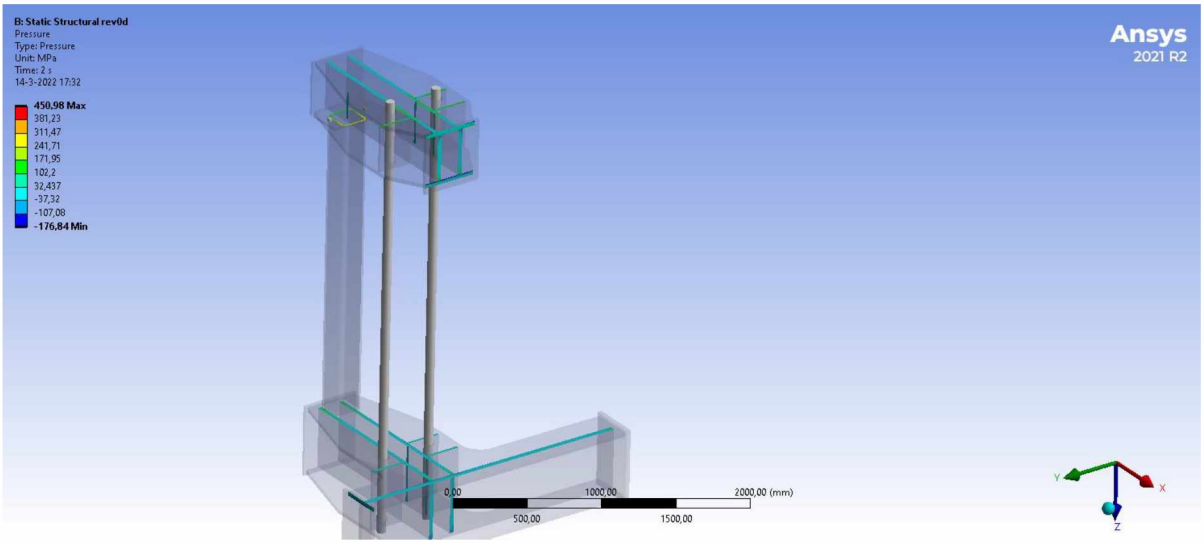

FIGURE 34
Model (B4, C4) > Static Structural (B5) > Solution (B6) > Contact Tool > Pressure > Image

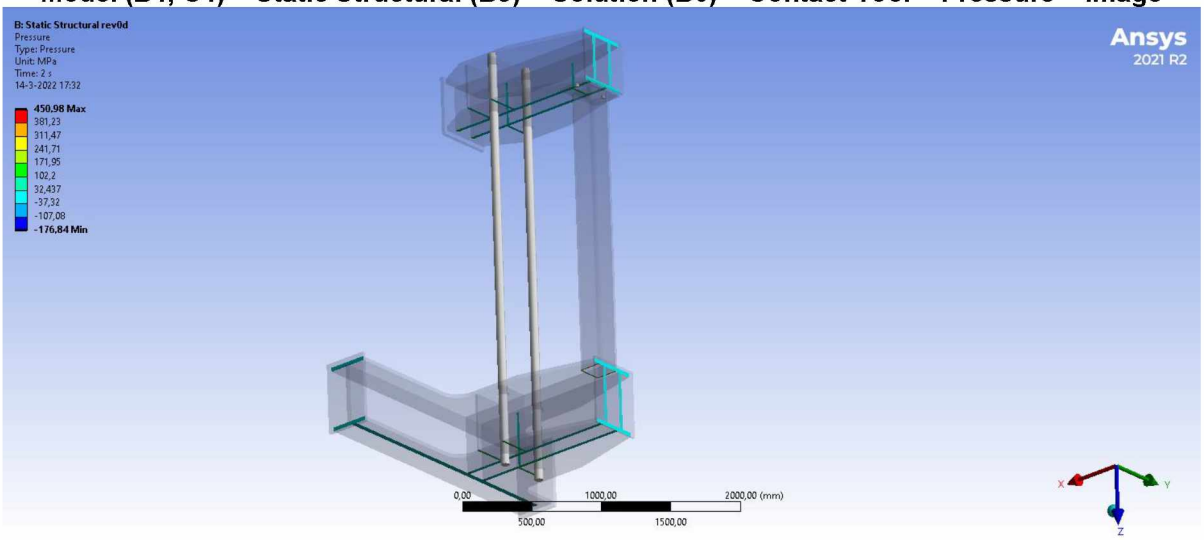

TABLE 35
Model (B4, C4) > Static Structural (B5) > Solution (B6) > Contact Tools

Object Name	*Contact Tool 2*
State	Solved
Scope	
Scoping Method	Worksheet

Model (B4, C4) > Static Structural (B5) > Solution (B6) > Contact Tool 2

Name	Contact Side
Frictional - Solid1215\Solid1211 To Solid1\Solid1	Both
Frictional - AandrukPlaatBot\Solid1 To Solid12252\Solid1221121	Both
Frictional - AandrukplaatTop\Solid To Solid1225\Solid122111	Both

TABLE 36
Model (B4, C4) > Static Structural (B5) > Solution (B6) > Contact Tool 2 > Results

Object Name	*Pressure*
State	Solved
Definition	

Type	Pressure
By	Time
Display Time	Last
Calculate Time History	Yes
Identifier	
Suppressed	No
Integration Point Results	
Display Option	Averaged
Results	
Minimum	0, MPa
Maximum	112,23 MPa
Average	17,708 MPa
Minimum Occurs On	Solid1\Solid1
Maximum Occurs On	AandrukplaatTop\Solid
Minimum Value Over Time	
Minimum	0, MPa
Maximum	0, MPa
Maximum Value Over Time	
Minimum	112,23 MPa
Maximum	112,25 MPa
Information	
Time	2, s
Load Step	2
Substep	1
Iteration Number	6

FIGURE 35
Model (B4, C4) > Static Structural (B5) > Solution (B6) > Contact Tool 2 > Pressure

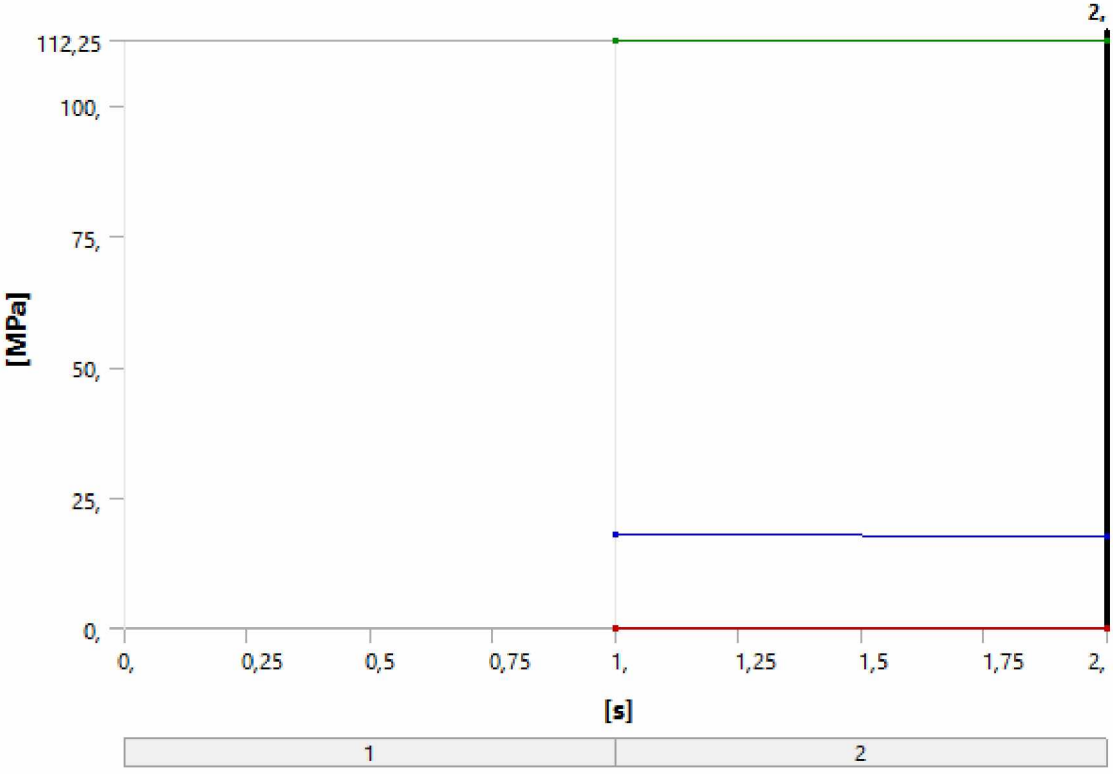

TABLE 37
Model (B4, C4) > Static Structural (B5) > Solution (B6) > Contact Tool 2 > Pressure

Time [s]	Minimum [MPa]	Maximum [MPa]
1,	0,	112,25
2,	0,	112,23

FIGURE 36
Model (B4, C4) > Static Structural (B5) > Solution (B6) > Contact Tool 2 > Pressure > Image

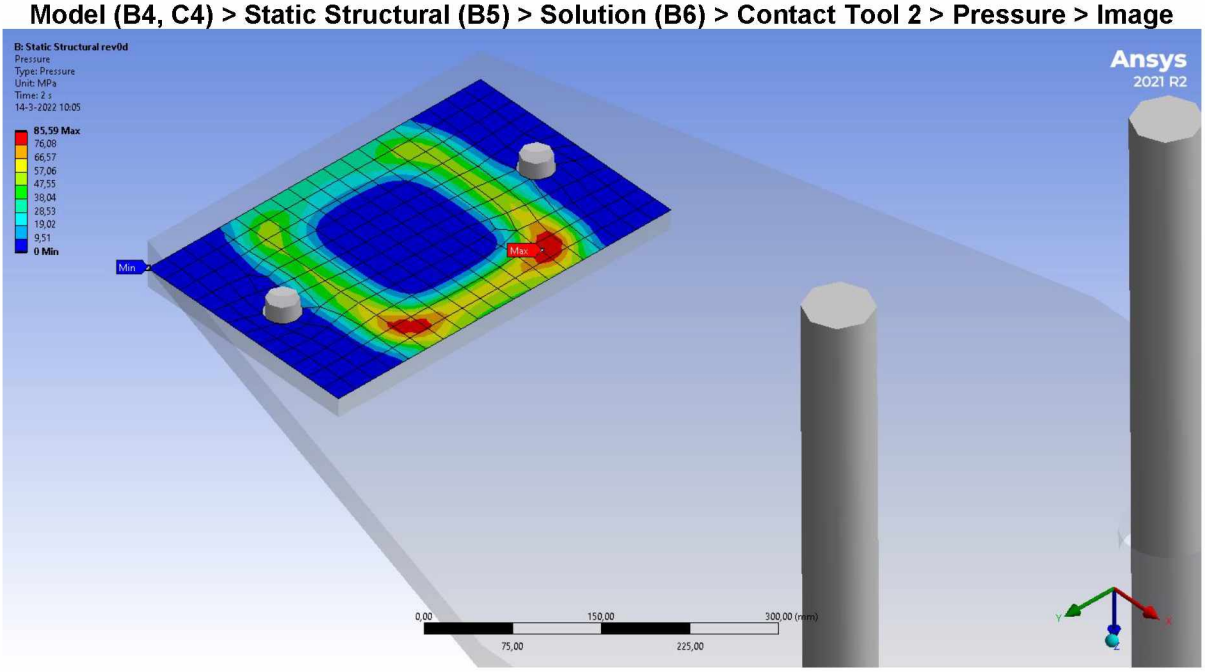

FIGURE 37
Model (B4, C4) > Static Structural (B5) > Solution (B6) > Contact Tool 2 > Pressure > Image

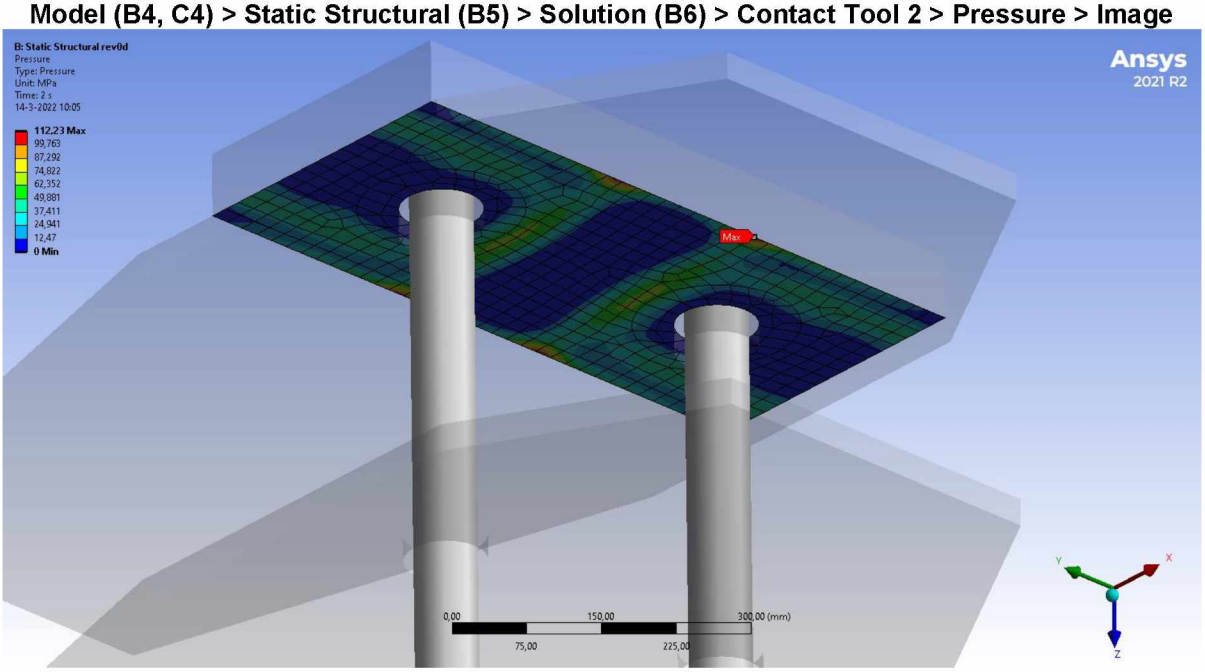

FIGURE 38
Model (B4, C4) > Static Structural (B5) > Solution (B6) > Contact Tool 2 > Pressure > Image

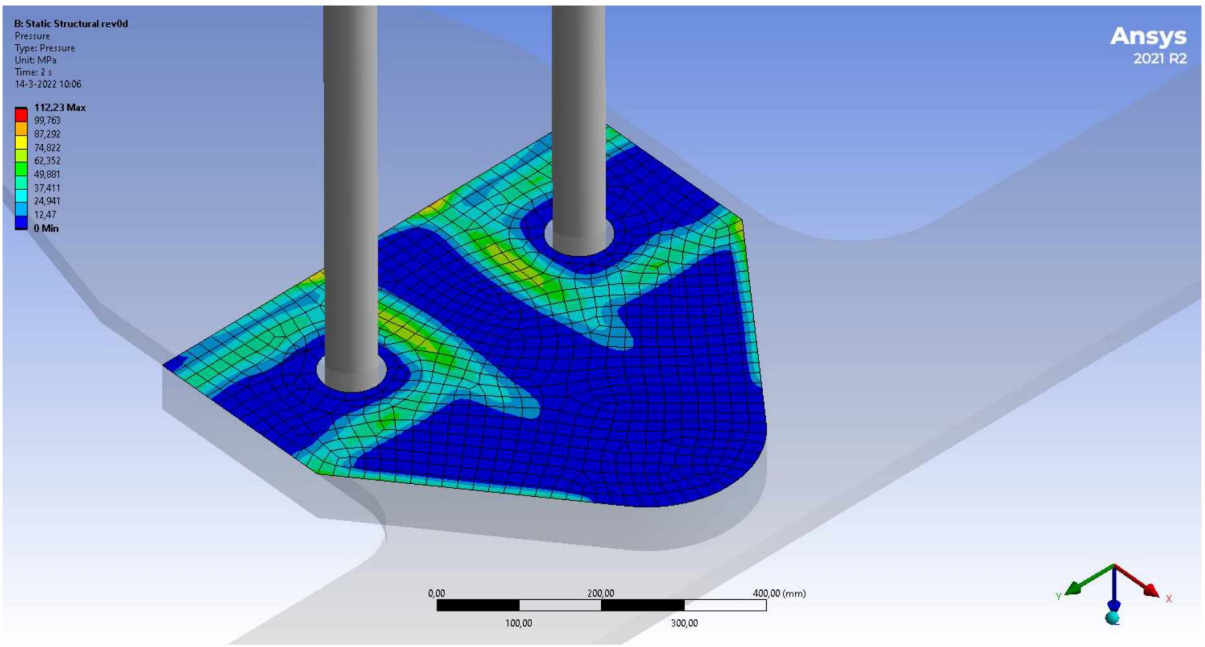

TABLE 38
Model (B4, C4) > Static Structural (B5) > Solution (B6) > Probes

Object Name	*Bolt Pretension*	*Bolt Pretension 2*
State	Solved	Solved
Definition		
Type	Bolt Pretension	Bolt Pretension
Boundary Condition	Bolt Pretension	Bolt Pretension 2
Suppressed	No	No
Options		
Display Time	End Time	End Time
Results		
Adjustment	15,928 mm	15,541 mm
Working Load	2,3019e+006 N	2,3024e+006 N
Minimum Value Over Time		
Adjustment	15,928 mm	15,541 mm
Working Load	0, N	0, N
Maximum Value Over Time		
Adjustment	15,928 mm	15,541 mm
Working Load	2,3019e+006 N	2,3024e+006 N
Information		
Time	2, s	2, s
Load Step	2	2
Substep	1	1
Iteration Number	6	6

FIGURE 39
Model (B4, C4) > Static Structural (B5) > Solution (B6) > Bolt Pretension

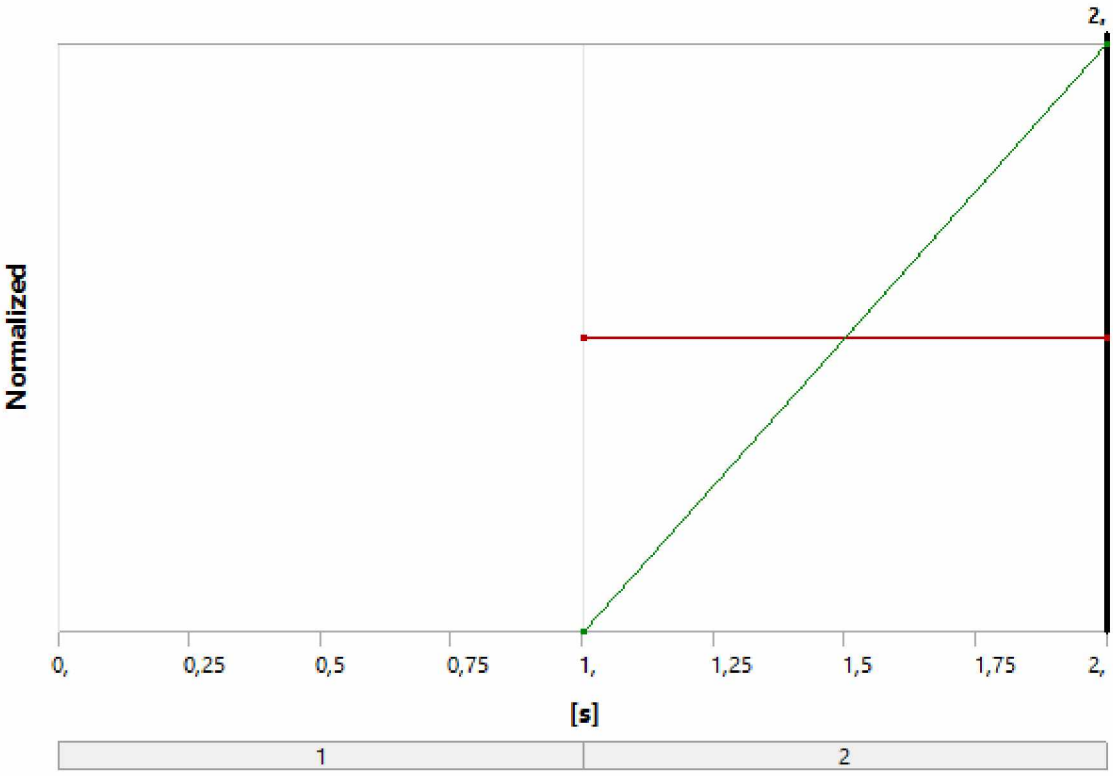

TABLE 39
Model (B4, C4) > Static Structural (B5) > Solution (B6) > Bolt Pretension

Time [s]	Bolt Pretension (Adjustment Reaction) [mm]	Bolt Pretension (Working Load) [N]
1,	15,928	0,
2,	15,928	2,3019e+006

FIGURE 40
Model (B4, C4) > Static Structural (B5) > Solution (B6) > Bolt Pretension > Image

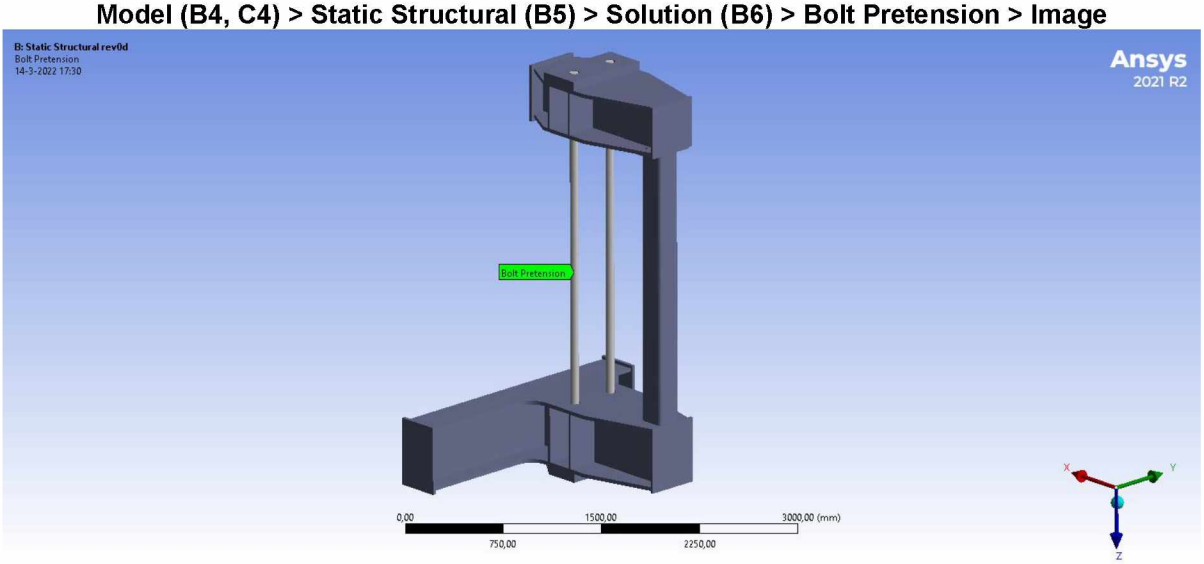

FIGURE 41
Model (B4, C4) > Static Structural (B5) > Solution (B6) > Bolt Pretension 2

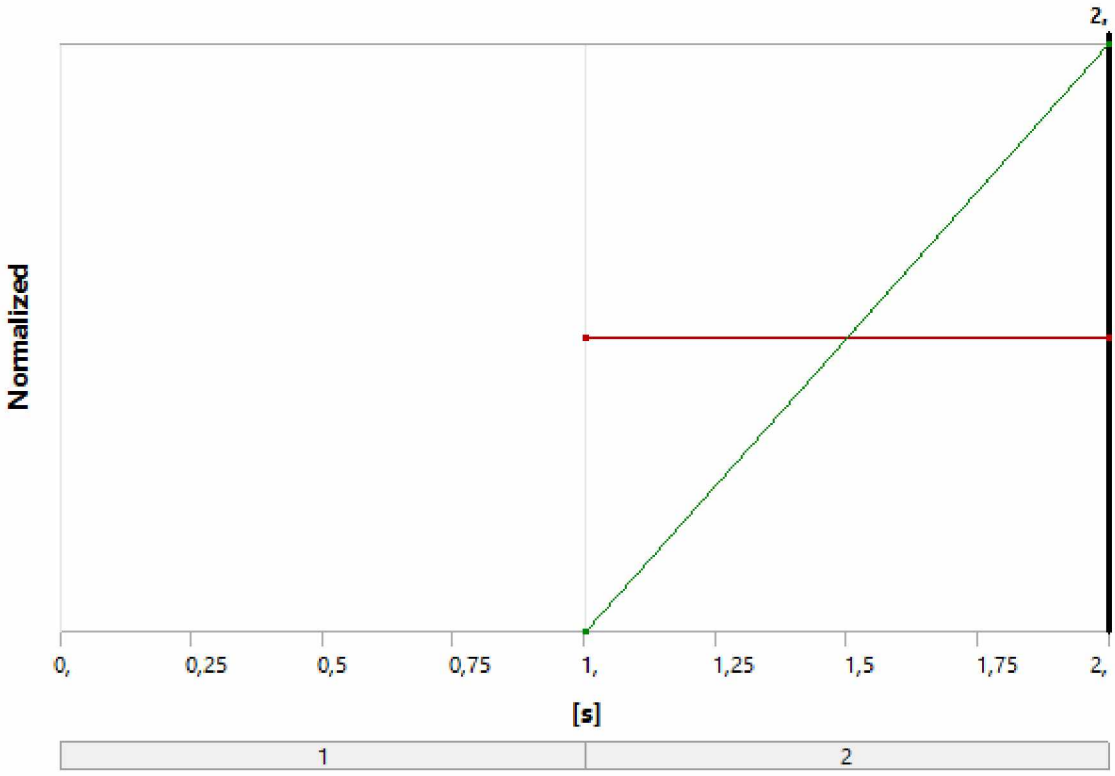

TABLE 40
Model (B4, C4) > Static Structural (B5) > Solution (B6) > Bolt Pretension 2

Time [s]	Bolt Pretension 2 (Adjustment Reaction) [mm]	Bolt Pretension 2 (Working Load) [N]
1,	15,541	0,
2,	15,541	2,3024e+006

FIGURE 42
Model (B4, C4) > Static Structural (B5) > Solution (B6) > Bolt Pretension 2 > Image

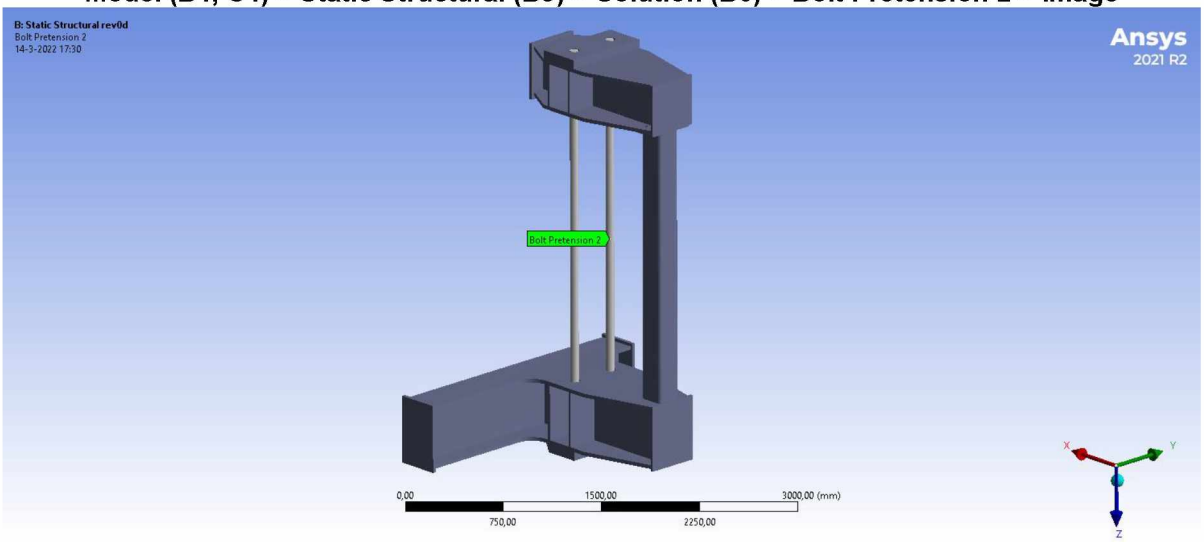

TABLE 41
Model (B4, C4) > Static Structural (B5) > Solution (B6) > Probes

Object Name	*Force Reaction*	*Force Reaction 2*
State	Solved	Solved
Definition		

Type	Force Reaction	Force Reaction
Location Method	Boundary Condition	Boundary Condition
Boundary Condition	Remote Displacement	Remote Displacement 2
Orientation	Global Coordinate System	Global Coordinate System
Suppressed	No	No
Options		
Result Selection	All	All
Display Time	End Time	End Time
Results		
X Axis	-14241 N	9493,9 N
Y Axis	-1275,3 N	1275,3 N
Z Axis	-2,8562e+006 N	1,8902e+006 N
Total	2,8562e+006 N	1,8902e+006 N
Maximum Value Over Time		
X Axis	-14241 N	9535,9 N
Y Axis	-1264,1 N	1275,3 N
Z Axis	-2,8534e+006 N	1,8902e+006 N
Total	2,8562e+006 N	1,8902e+006 N
Minimum Value Over Time		
X Axis	-14304 N	9493,9 N
Y Axis	-1275,3 N	1264,1 N
Z Axis	-2,8562e+006 N	1,8882e+006 N
Total	2,8534e+006 N	1,8882e+006 N
Information		
Time	2, s	2, s
Load Step	2	2
Substep	1	1
Iteration Number	6	6

FIGURE 43
Model (B4, C4) > Static Structural (B5) > Solution (B6) > Force Reaction

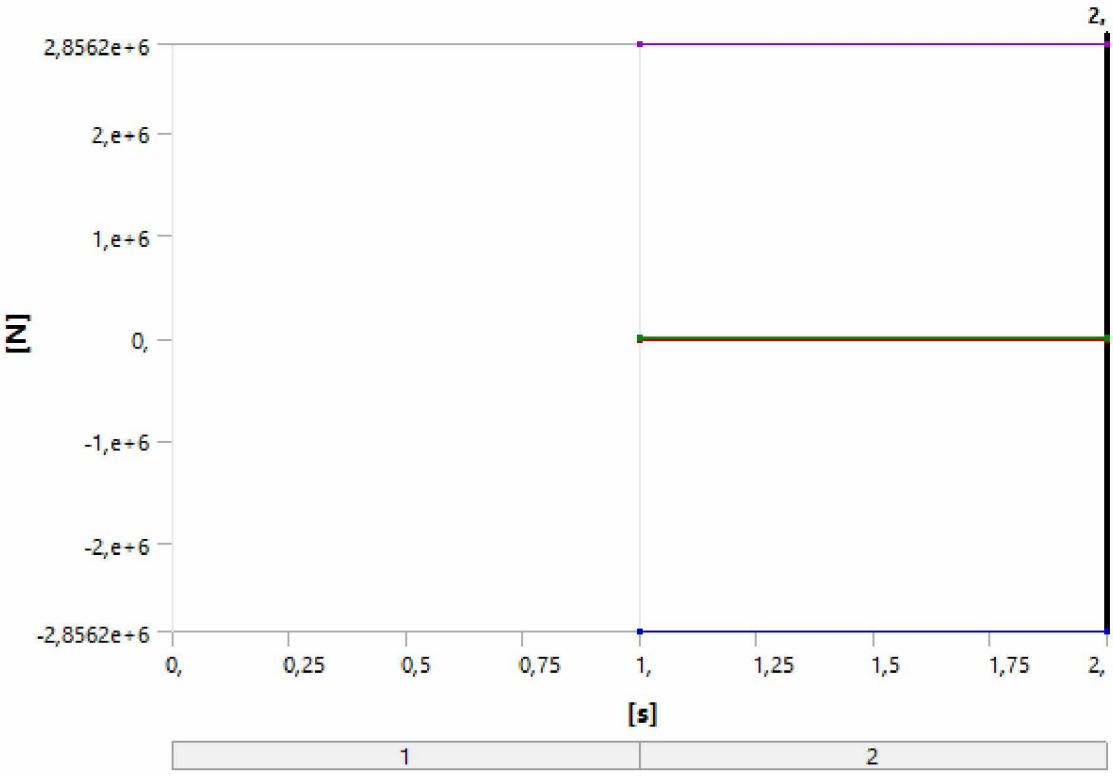

TABLE 42
Model (B4, C4) > Static Structural (B5) > Solution (B6) > Force Reaction

Time [s]	Force Reaction (X) [N]	Force Reaction (Y) [N]
1,	-14304	-1264,1
2,	-14241	-1275,3

FIGURE 44
Model (B4, C4) > Static Structural (B5) > Solution (B6) > Force Reaction > Image

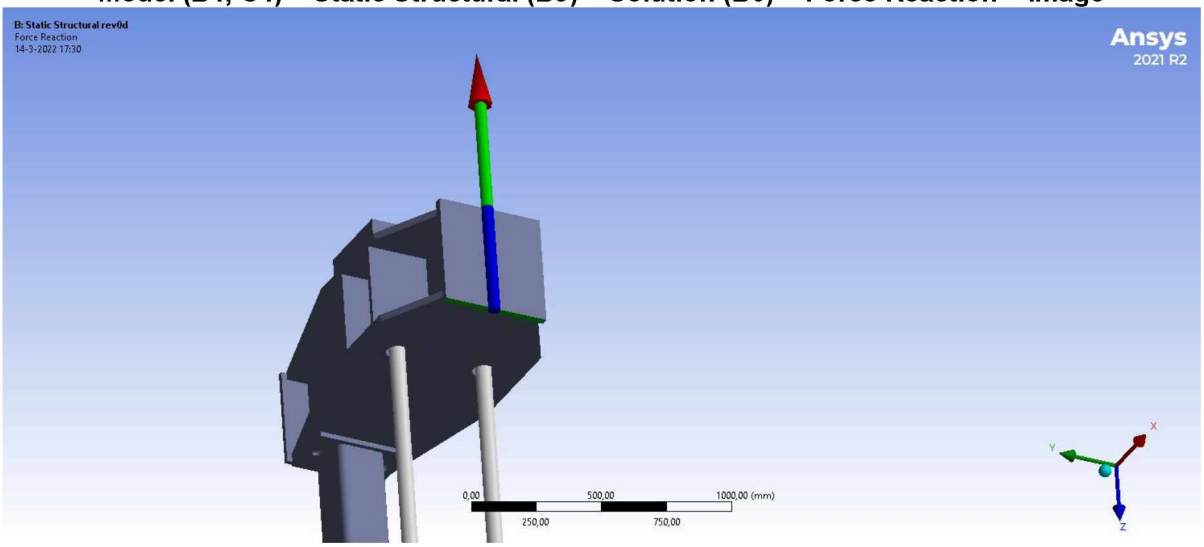

FIGURE 45
Model (B4, C4) > Static Structural (B5) > Solution (B6) > Force Reaction 2

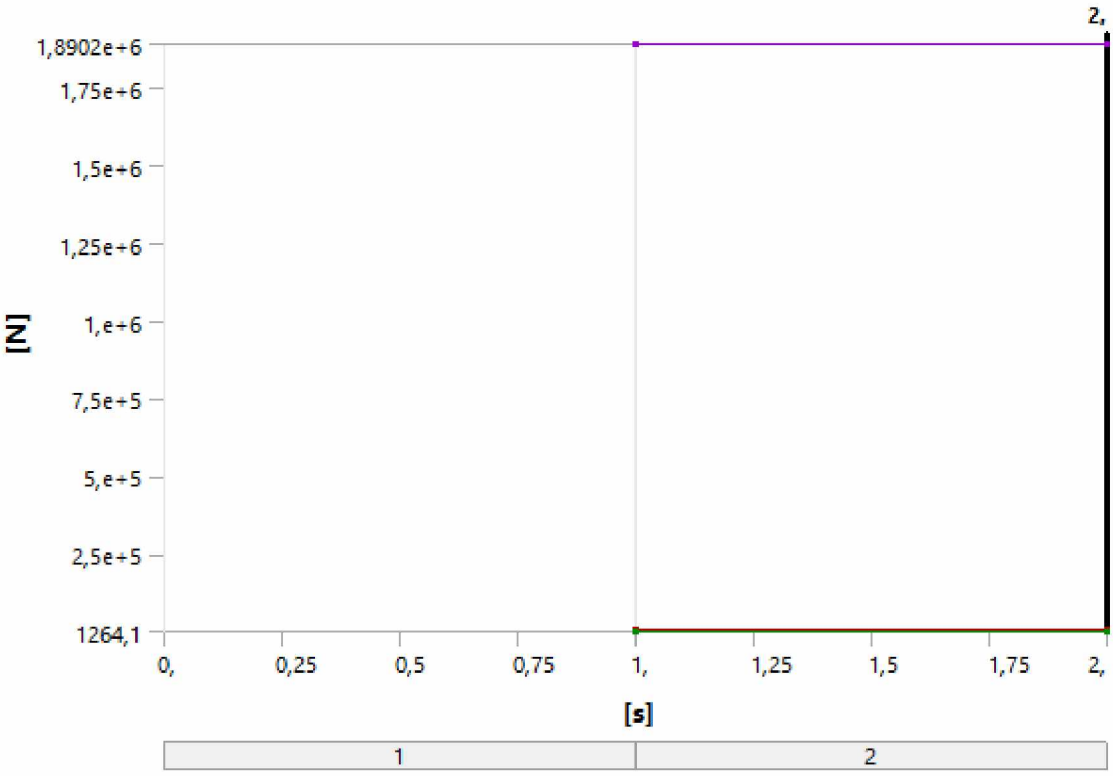

TABLE 43
Model (B4, C4) > Static Structural (B5) > Solution (B6) > Force Reaction 2

Time [s]	Force Reaction 2 (X) [N]	Force Reaction 2 (Y) [N]
1,	9535,9	1264,1
2,	9493,9	1275,3

FIGURE 46
Model (B4, C4) > Static Structural (B5) > Solution (B6) > Force Reaction 2 > Image

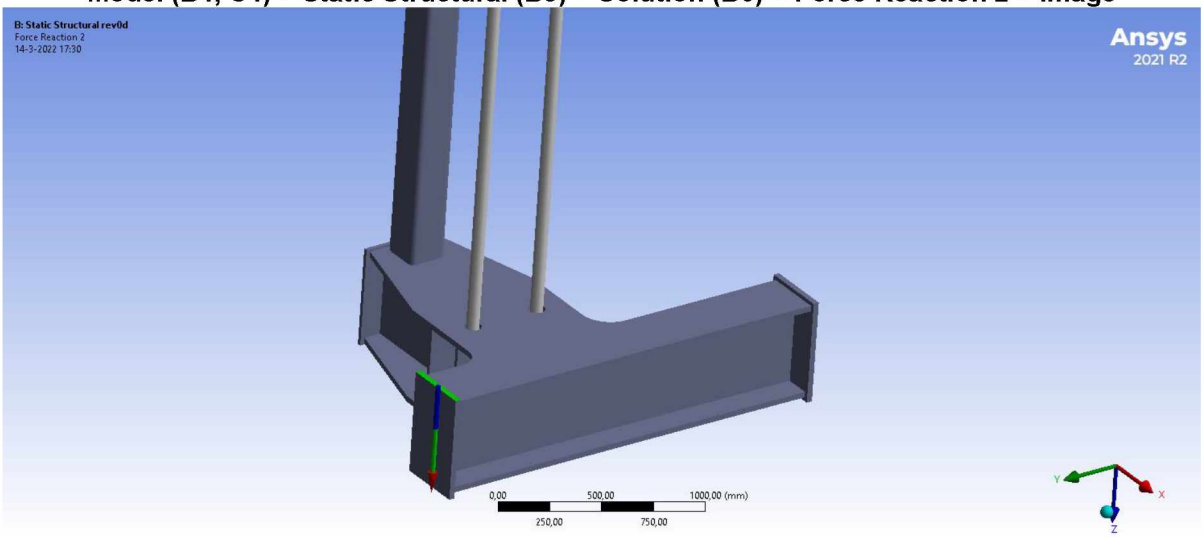

TABLE 44
Model (B4, C4) > Static Structural (B5) > Solution (B6) > Probes

Object Name	*Force Reaction 3*	*Force Reaction 5*
State	Solved	Solved
Definition		

Type	Force Reaction	Force Reaction
Location Method	Boundary Condition	Contact Region
Boundary Condition	Remote Displacement 3	
Orientation	Global Coordinate System	Global Coordinate System
Suppressed	No	No
Contact Region		Frictional - Solid1215\Solid1211 To Solid1\Solid1
Extraction		Contact (Underlying Element)
Options		
Result Selection	All	All
Display Time	End Time	End Time
Results		
X Axis	4747, N	32573 N
Y Axis	0, N	1838,7 N
Z Axis	9,3938e+005 N	-1,758e+006 N
Total	9,394e+005 N	1,7583e+006 N
Maximum Value Over Time		
X Axis	4767,9 N	32573 N
Y Axis	0, N	1838,7 N
Z Axis	9,3938e+005 N	-1,7565e+006 N
Total	9,394e+005 N	1,7583e+006 N
Minimum Value Over Time		
X Axis	4747, N	32568 N
Y Axis	0, N	1825,4 N
Z Axis	9,3851e+005 N	-1,758e+006 N
Total	9,3852e+005 N	1,7568e+006 N
Information		
Time	2, s	2, s
Load Step	2	2
Substep	1	1
Iteration Number	6	6

FIGURE 47
Model (B4, C4) > Static Structural (B5) > Solution (B6) > Force Reaction 3

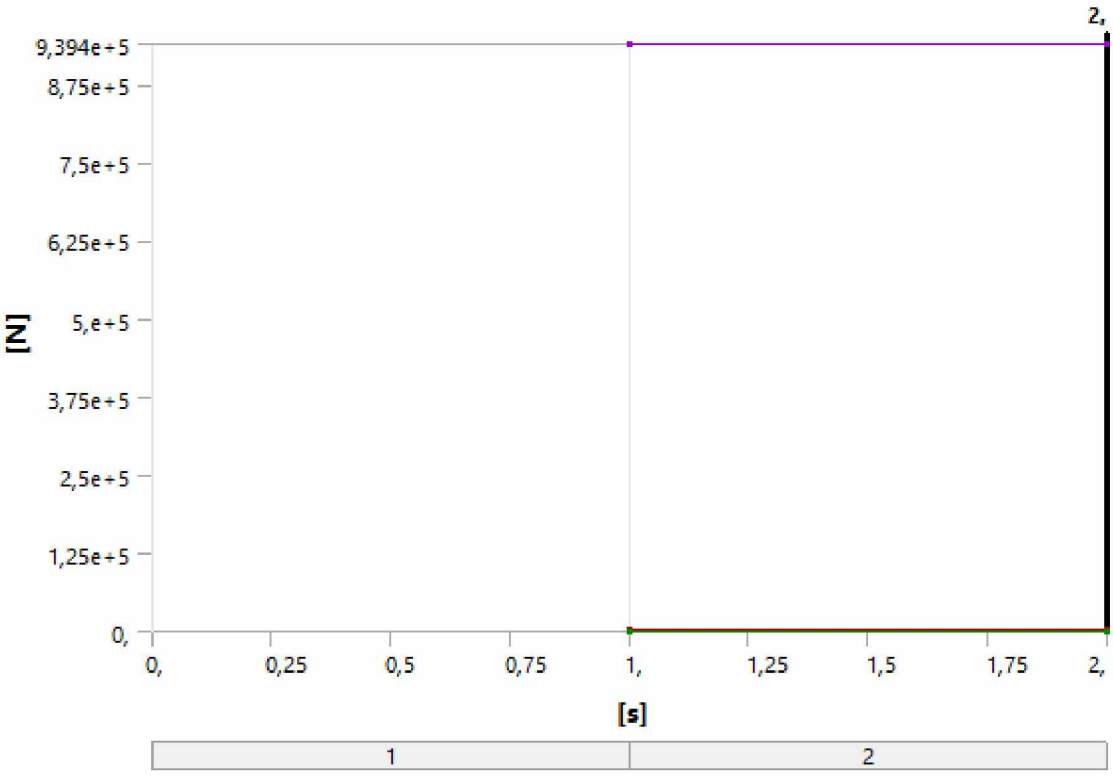

TABLE 45
Model (B4, C4) > Static Structural (B5) > Solution (B6) > Force Reaction 3

Time [s]	Force Reaction 3 (X) [N]	Force Reaction 3 (Y) [N]
1,	4767,9	0,
2,	4747,	0,

FIGURE 48
Model (B4, C4) > Static Structural (B5) > Solution (B6) > Force Reaction 3 > Image

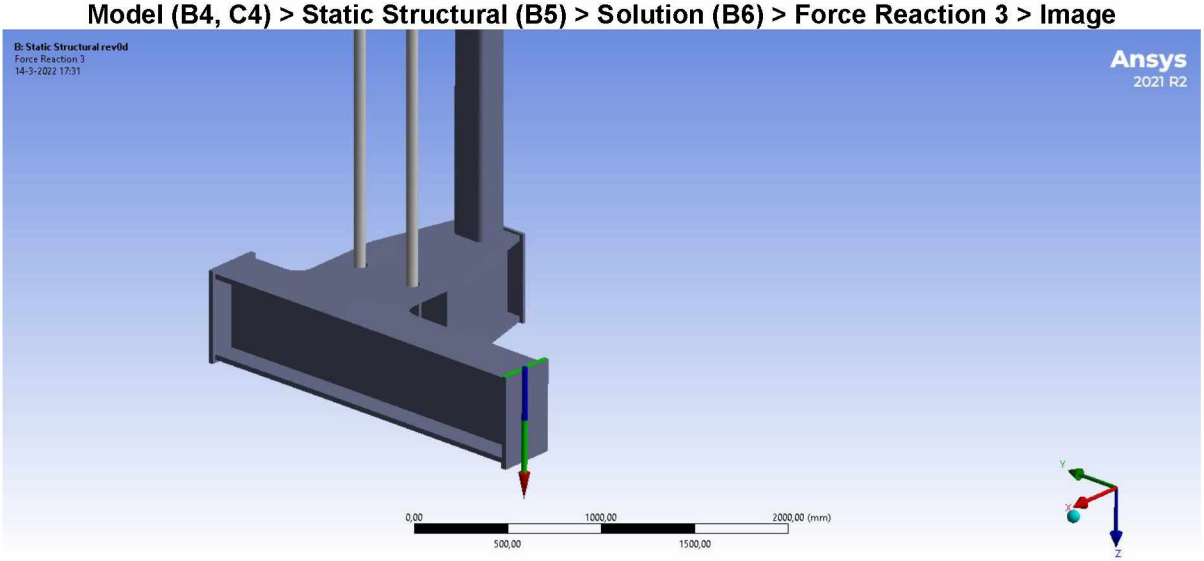

FIGURE 49
Model (B4, C4) > Static Structural (B5) > Solution (B6) > Force Reaction 5

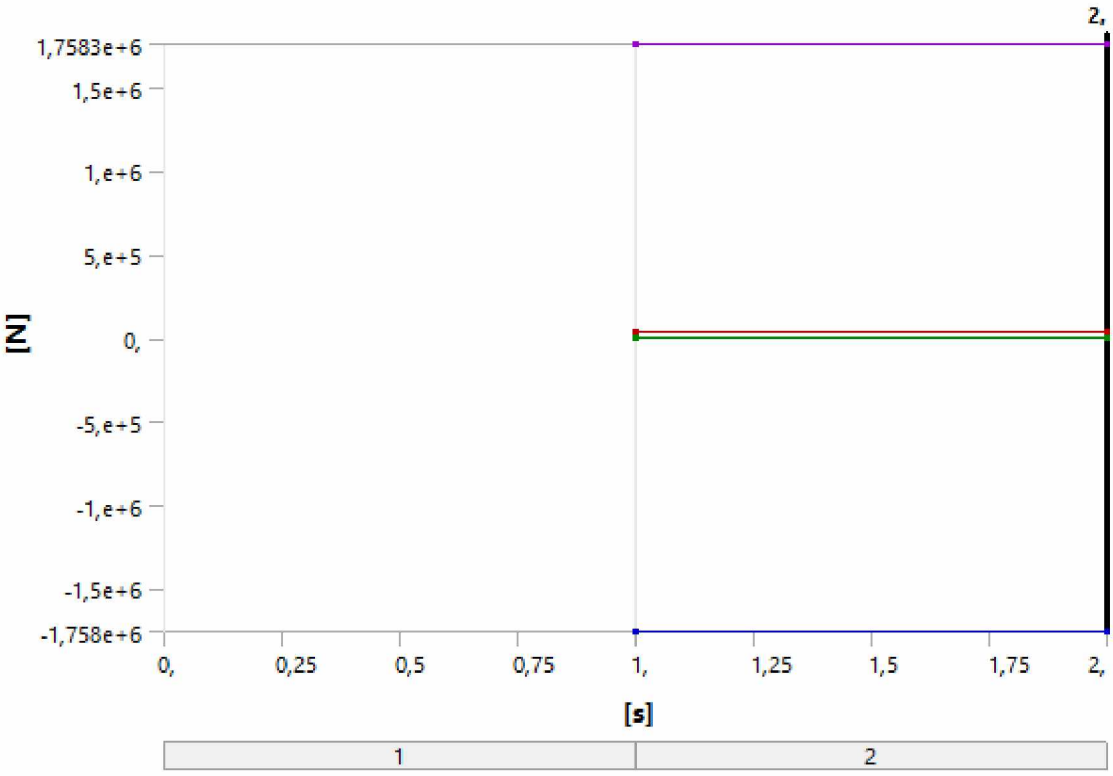

TABLE 46
Model (B4, C4) > Static Structural (B5) > Solution (B6) > Force Reaction 5

Time [s]	Force Reaction 5 (X) [N]	Force Reaction 5 (Y) [N]
1,	32568	1825,4
2,	32573	1838,7

FIGURE 50
Model (B4, C4) > Static Structural (B5) > Solution (B6) > Force Reaction 5 > Image

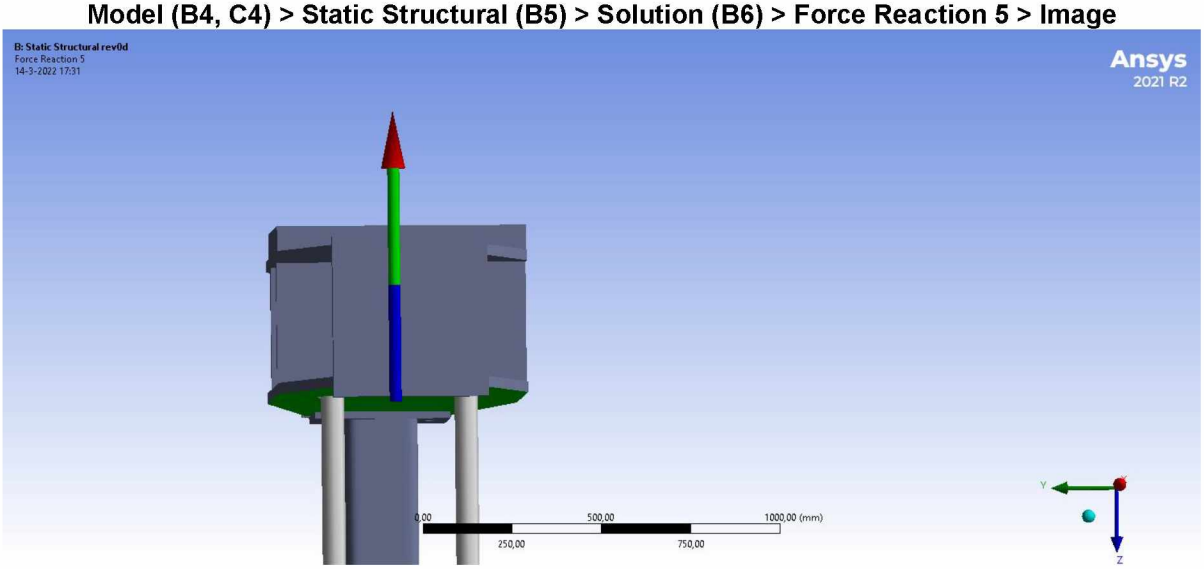

Eigenvalue Buckling (C5)

TABLE 47
Model (B4, C4) > Analysis

Object Name	*Eigenvalue Buckling (C5)*
State	Solved
Definition	
Physics Type	Structural
Analysis Type	Eigenvalue Buckling
Solver Target	Mechanical APDL
Options	
Generate Input Only	No

Solution (C6)

TABLE 48
Model (B4, C4) > Eigenvalue Buckling (C5) > Solution

Object Name	*Solution (C6)*
State	Solved
Solution	
Number Of Cores to Use (Beta)	Solve Process Settings
Adaptive Mesh Refinement	
Max Refinement Loops	1,
Refinement Depth	2,
Information	
Status	Done
MAPDL Elapsed Time	2 m 44 s
MAPDL Memory Used	19,707 GB
MAPDL Result File Size	76,438 MB
Post Processing	
Distributed Post Processing (Beta)	Program Controlled
Mesh Source (Beta)	Program Controlled
Beam Section Results	No

FIGURE 51
Model (B4, C4) > Eigenvalue Buckling (C5) > Solution (C6)

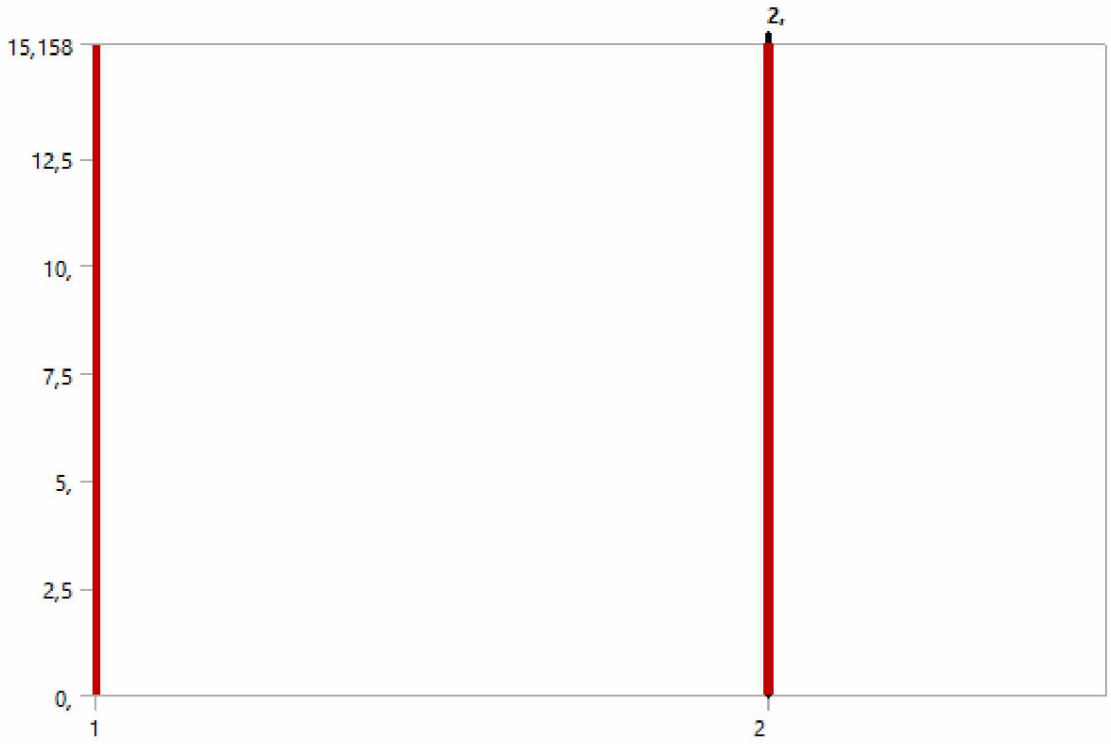

TABLE 49
Model (B4, C4) > Eigenvalue Buckling (C5) > Solution (C6)

Mode	Load Multiplier
1,	15,115
2,	15,158

TABLE 50
Model (B4, C4) > Eigenvalue Buckling (C5) > Solution (C6) > Results

Object Name	*Total Deformation*	*Total Deformation 2*
State	Solved	Solved
Scope		
Scoping Method	Geometry Selection	Geometry Selection
Geometry	All Bodies	All Bodies
Definition		
Type	Total Deformation	Total Deformation
Mode	1,	2,
Identifier		
Suppressed	No	No
Results		
Load Multiplier	15,115	15,158
Minimum	5,3105e-006 mm	9,7312e-007 mm
Maximum	1,0001 mm	1, mm
Average	2,4342e-002 mm	2,0636e-002 mm
Minimum Occurs On	Component873\Solid	MesPlaat700\Solid
Maximum Occurs On	Component87253\Solid1	Component87253\Solid1

TABLE 51
Model (B4, C4) > Eigenvalue Buckling (C5) > Solution (C6) > Total Deformation

Mode	Load Multiplier

1,	15,115
2,	15,158

FIGURE 52
Model (B4, C4) > Eigenvalue Buckling (C5) > Solution (C6) > Total Deformation > Image

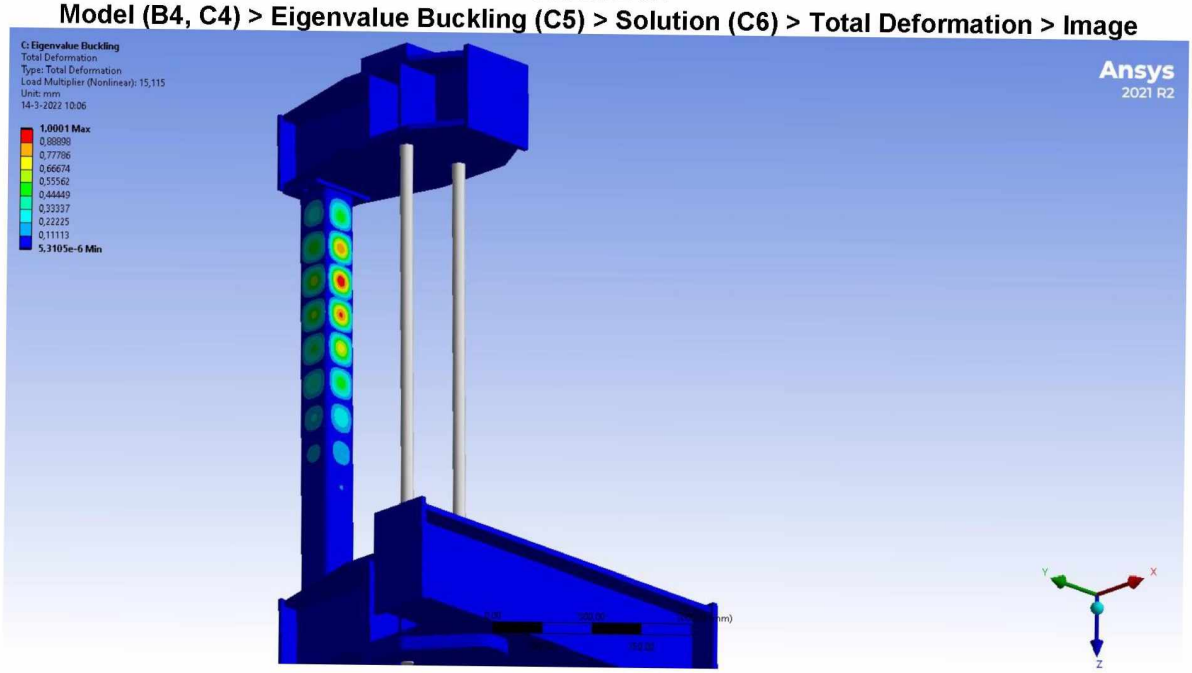

TABLE 52
Model (B4, C4) > Eigenvalue Buckling (C5) > Solution (C6) > Total Deformation 2

Mode	Load Multiplier
1,	15,115
2,	15,158

FIGURE 53
Model (B4, C4) > Eigenvalue Buckling (C5) > Solution (C6) > Total Deformation 2 > Image

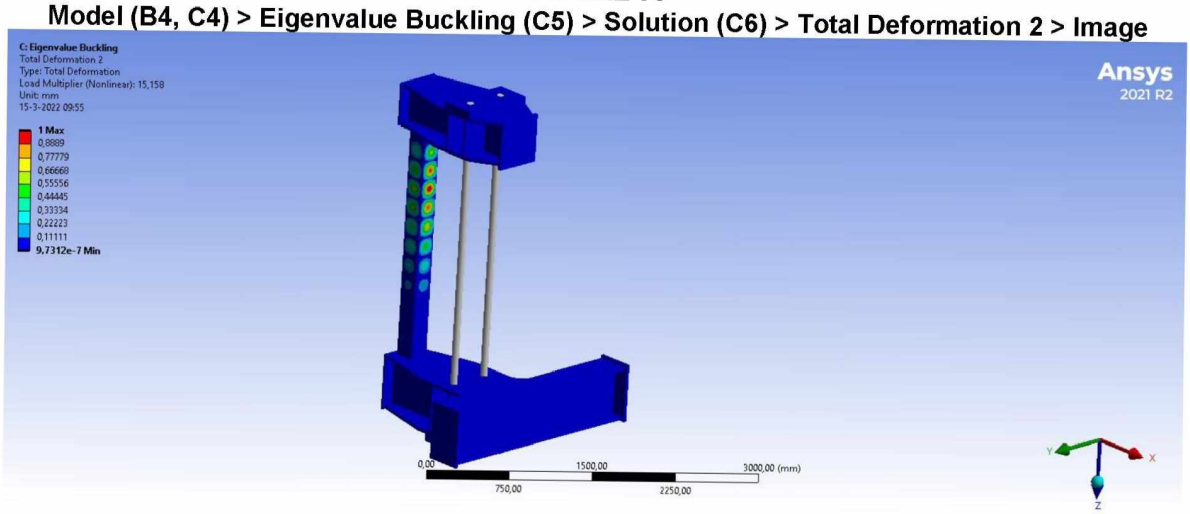

Material Data

Structural Steel S355

TABLE 53
Structural Steel S355 > Constants

Density	7,85e-006 kg mm^-3
Coefficient of Thermal Expansion	1,2e-005 C^-1
Specific Heat	4,34e+005 mJ kg^-1 C^-1
Thermal Conductivity	6,05e-002 W mm^-1 C^-1
Resistivity	1,7e-004 ohm mm

TABLE 54
Structural Steel S355 > Color

Red	Green	Blue
132,	139,	179,

TABLE 55
Structural Steel S355 > Isotropic Secant Coefficient of Thermal Expansion

Zero-Thermal-Strain Reference Temperature C
22,

TABLE 56
Structural Steel S355 > Isotropic Elasticity

Young's Modulus MPa	Poisson's Ratio	Bulk Modulus MPa	Shear Modulus MPa	Temperature C
2,1e+005	0,3	1,75e+005	80769	

TABLE 57
Structural Steel S355 > Isotropic Relative Permeability

Relative Permeability
10000

TABLE 58
Structural Steel S355 > Tensile Yield Strength

Tensile Yield Strength MPa
355,

TABLE 59
Structural Steel S355 > Compressive Yield Strength

Compressive Yield Strength MPa
355,