efectis
france

SAS au capital de 1 512 170 €
RCS Evry B 490 550 712 - Code APE 7120 B
N° TVA : FR 61490550712

# FIRE RESISTANCE TEST OF BUILDING ELEMENTS

*According to the European Standard EN 81-58*

# RANGE REPORT n° 07 - A - 114

*Reference tests n° :*
**06-V-220**
**06-V-322**
**06-V-369**

*Performed on the :*
**June 15th 2006**
**October 3rd 2006**
**November 20th 2006**

*Scope :*
**A range of telescopic opening lift landing doors « PRIMA TLD E 120 » with two non-insulated panels.**

- **Fire side : Landing side**

*Sponsor :*
**OTIS**
**New Equipment Center**
**Avenue des Montoires**
**F - 45 504 GIEN Cedex**

**This document is a translation of the « Appréciation de Laboratoire n° 07-A-114 ».**
**In case of litigation only the French version prevails.**

***This range report has 20 pages. Only a full copy of this report permits a normal utilization.***

Siège
Espace Technologique
Bâtiment Apollo - Route de l'Orme des merisiers
F 91193 Saint-Aubin
Tél : 33 (0)1 60 13 83 80 Fax : 33 (0)1 60 13 70 80
SIRET n° 490 550 712 00031

france@efectis.com
www.efectis.com

Laboratoire
Voie Romaine
F 57280 Maizières-les-Metz
Tél : 33 (0)3 87 51 11 11
Fax : 33 (0)3 87 51 10 58
SIRET n° 490 550 712 00023

## 1. SCOPE OF REPORT

Qualification of a range of insulated landing doors in accordance with the particular requirements of the standard EN 81-58 « Safety rules for the construction and installation of lift – Examination and test - Part 58 : Landing doors fire resistance test ».

## 2. LABORATORY

Name : EFECTIS France

Address : EFECTIS France
Voie Romaine
57280 Maizières-lès-Metz
FRANCE

## 3. SPONSOR OF THE TEST

Name : OTIS

Address : New Equipment Center
Avenue des Montoires
45504 GIEN CEDEX
FRANCE

## 4. FIRE RESISTANCE TESTS

| N°test | Date | Dimensions of clear opening |
|---|---|---|
| 06-V-220 | June 15th 2006 | 900 x 2100 mm (w x h) |
| 06-V-322 | October 3rd 2006 | 800 x 2000 mm (w x h) |
| 06-V-369 | November 20th 2006 | 900 x 2100 mm (w x h) |

## 5. REFERENCE AND SUPPLIER OF THE SPECIMEN

Reference : « PRIMA TLD E 120 »

Supplier : OTIS
New Equipment Center
Avenue des Montoires
45504 GIEN CEDEX
FRANCE

# 6. DESCRIPTION OF THE SPECIMEN

## 6.1. GENERAL

These landing doors are carried out in metal sheets of thickness 1 mm, 1.2 mm and 1.5 mm.
They are made up of the following elements :

- A structural frame (columns, header, decorative lintel and sill) fixed:
  - by 6 angles fixed to the columns on the sides,
  - by 3 angles fixed to the header,
  - by 3 or 4 angles fixed to the sill.
- 2 panels hung on the upper side on the header and guided via shoes, sliding in the sill grooves.
- A driving mechanism.

In the remainder of this description, the following abbreviations will be used :

- OP : width of clear opening
- OPH : height of clear opening.

## 6.2. DETAILED DESCRIPTION OF THE SPECIMEN

### 6.2.1. Interfaces Sill / Building and header / Building

Five types of angles for the sill's fixing are possible :

- Angles for landing mounting type 1
- Angles for landing mounting type 2
- Angles for hoistway mounting type 1
- Angles for hoistway mounting type 2

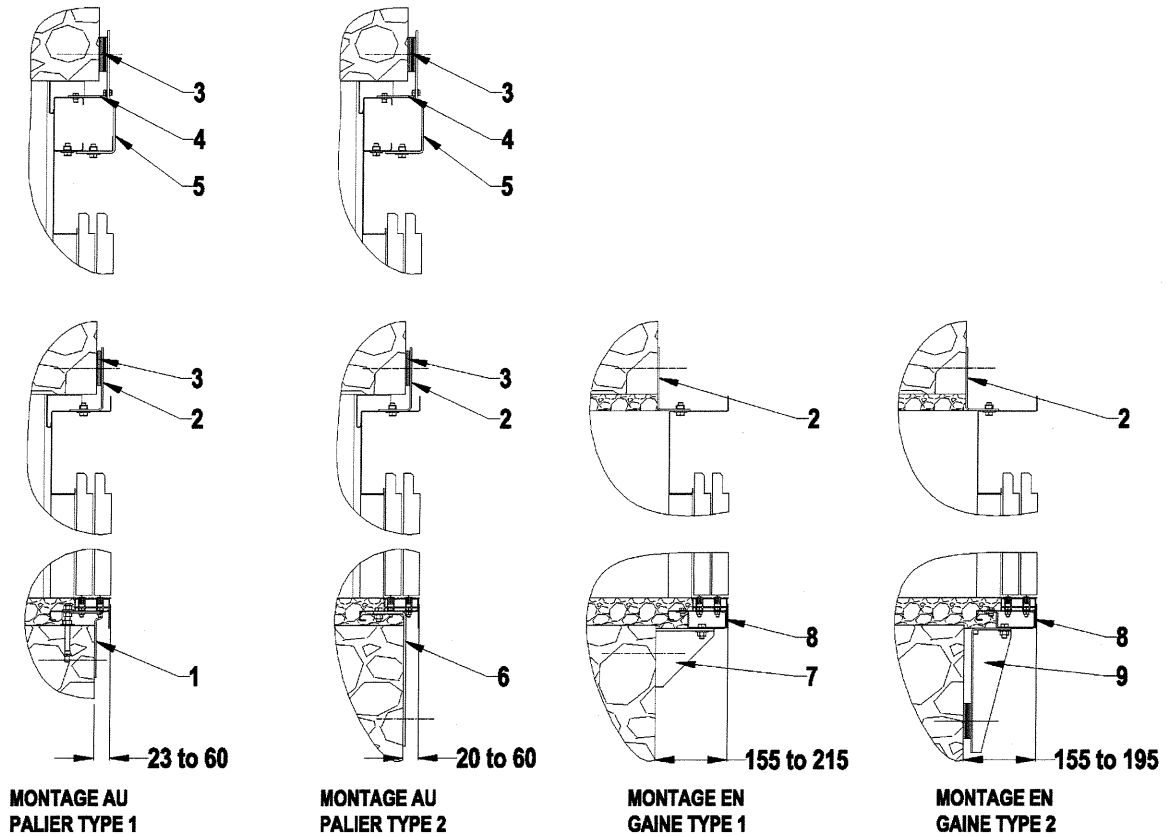

| ITEM | DESCRIPTION |
|---|---|
| **1. Lower angle (landing mounting type 1)** | |
| Material | 4 mm thick mild steel |
| Finish | Painting |
| Overall size | 85 mm X 170 mm X 70 mm |
| **2. Upper angle** | |
| Material | 4 mm thick mild steel |
| Finish | Painting |
| Overall size | 85 mm X 165 mm X 70 mm |
| **3. Shim** | |
| Material | Galvanized mild steel |
| Thickness | 1 mm & 2.5 mm |
| Overall size | 70 mm X 90 mm |
| **4. Additional header bracket** | |
| Material | Galvanized mild steel |
| Thickness | 3 mm |
| Overall size | 20 mm X 20 mm X 80 mm |
| Fixing to additional header | 1 screw HM8 X 25 mm |
| Fixing to upper angle | 1 screw HM8 X 25 mm |
| **5. Upper angle** | |
| Material | Mild steel |
| Finish | Painting |
| Thickness | 5 mm |
| Vertical section dimensions | 90 mm X 100 mm |
| Length | 320 mm for TF24 and OPH = 2000 mm<br>for TF and OPH = 2100 mm<br>420 mm for TF and OPH = 2000 mm<br>520 mm for TF27 and OPH = 2100 mm<br>620 mm for TF27 and OPH = 2000 mm |
| Fixing to wall | 1 dowel HILTI HSA M12 X 150 |
| Fixing to header | 1 screw HM8 X 25 |
| **6. Lower angle (landing mounting type 2)** | |
| Material | 6 mm thick mild steel |
| Finish | Painting |
| Overall size | 85 mm X 320 mm X 80 mm |
| **7. Sill support reinforcement** | |
| Material | Galvanized mild steel |
| Thickness | 3 mm |
| Overall size | 12 mm X 45 mm X 85 mm X 45 mm X 29 mm |
| Fixing to sill support | 6 screws HM8 X 25 mm |
| **8. Lower angle (hoistway mounting type 1)** | |
| Material | 6 mm thick mild steel |
| Finish | Painting |
| Overall size | 100 mm X 150 mm X 80 mm |
| **9. Lower angle (hoistway mounting type 2)** | |
| Material | 4 mm thick mild steel |
| Finish | Painting |
| Overall size | 100 mm X 320 mm X 84 mm |

These angles are fastened either by HILTI HSA M12 X 150 dowels, or by JORDAHL JC M12 X 40 mm screws.

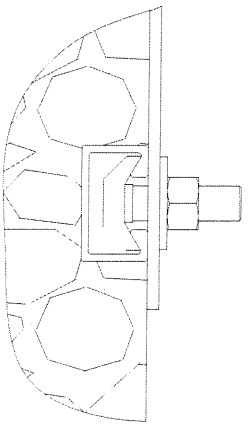

**JORDAHL FASTENING**

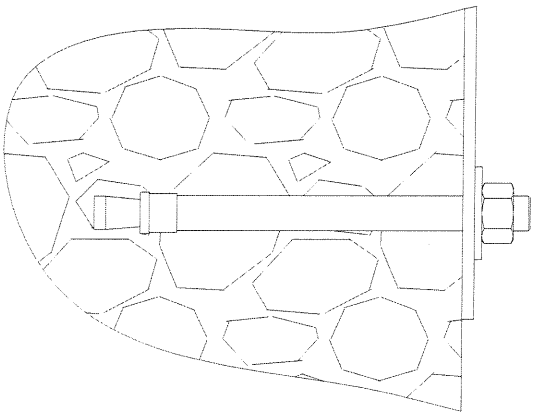

**DOWEL FASTENING**

### 6.2.2. Column / building interface

*6.2.2..1. TRF frame with telescopic elements*

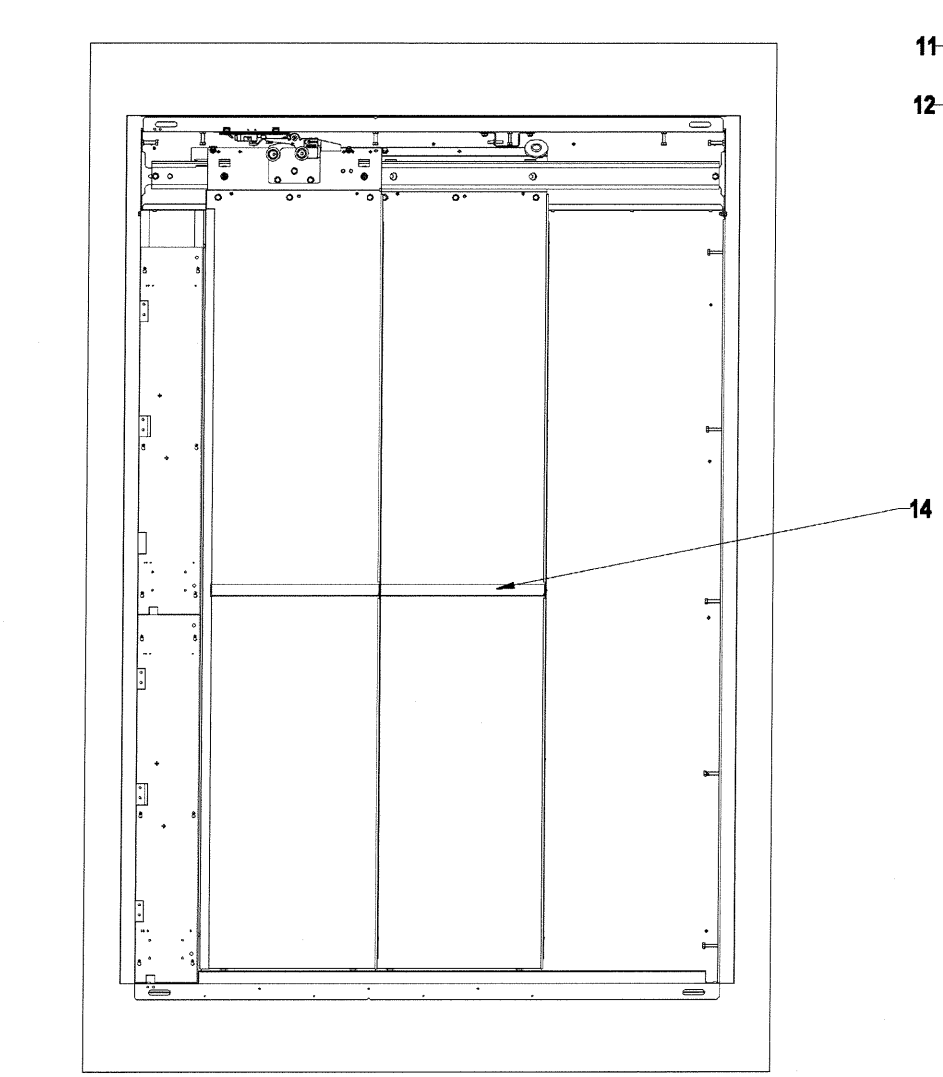


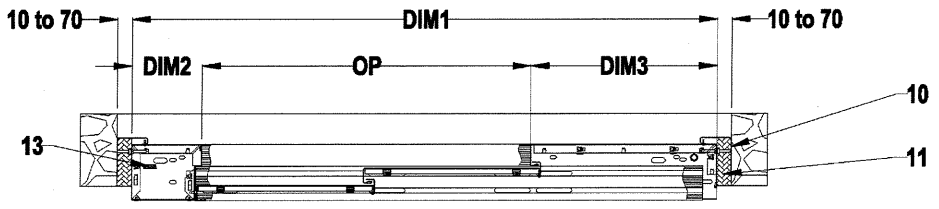


| OP | DIM1 | DIM2 | DIM3 |
|---|---|---|---|
| 700 | 1300 | 195 | 405 |
| 800 | 1470 | 195 | 475 |
| | 1540 | 265 | 475 |
| 900 | 1610 | 195 | 515 |

| IETM | DESCRIPTION |
|---|---|
| **10. Lateral telescopic element (if landing mounting)** | |
| Material | Stainless steel or Pre-painted steel or Skinplate steel |
| Thickness | 1.2 mm |
| Horizontal section dimensions | 15 mm X 20 mm X 85 mm X 100 mm |
| Length | 2300 mm for TRF and OPH = 2000 mm<br>2400 mm for TRF and OPH = 2100 mm<br>2440 mm for TF24<br>2540 mm for TF25<br>2740 mm for TF27 |
| Fixing to column/header/additional header | 7 self-tapping screws 3.9 X 9 mm |
| Fixing to wall | 7 screws HM8 X 80 mm |
| **11. Glass wool** | |
| Material | Glass wool |
| Density | 22 kg/m3 |
| Section dimensions | 60 mm X 150 mm |
| **12. Upper telescopic element (if landing mounting)** | |
| Material | Stainless steel |
| Thickness | 1.2 mm |
| Vertical section dimensions | 11 mm X 12 mm X 85 mm X 90 mm |
| Length | DIM 1 mm |
| Fixing to additional header | 5 self-tapping screws 3.9 X 9 mm |
| Fixing to wall | 5 screws HM8 X 80 mm |
| **13. Counterweight** | |
| Material | Steel profile |
| Size | 10 mm X 35 mm X 950 |
| **14. Panel stiffener (if OP ≥ 900)** | |
| Material | Galvanized mild steel |
| Thickness | 1.5 mm |
| Overall size | OP / 2 + 25 mm X 37 mm X 21 mm |
| Fixing to panel | 1 rivet Ø4 X 8.5 |

*6.2.2..2. TRF frame without telescopic elements*

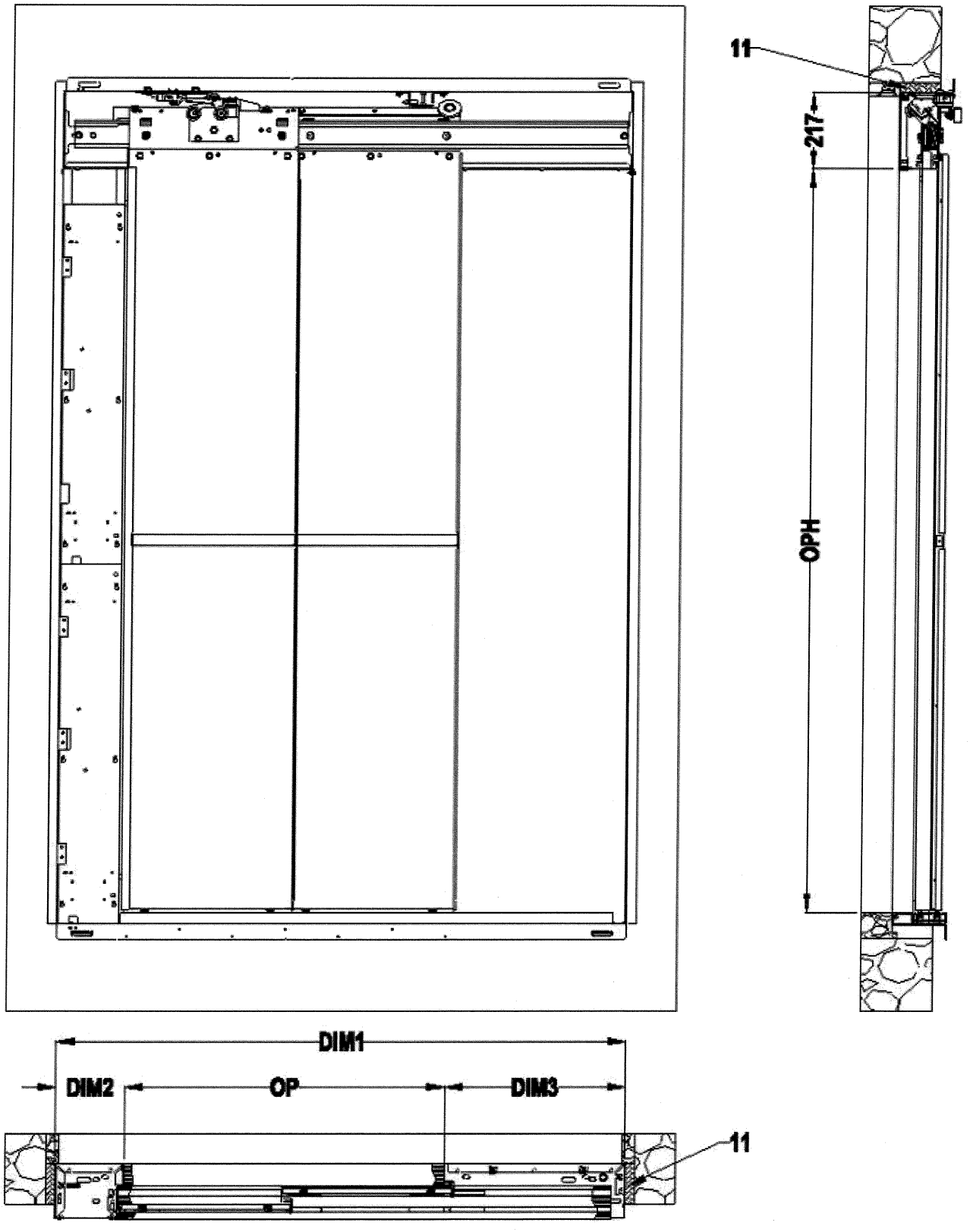

### 6.2.2..3. TF frame

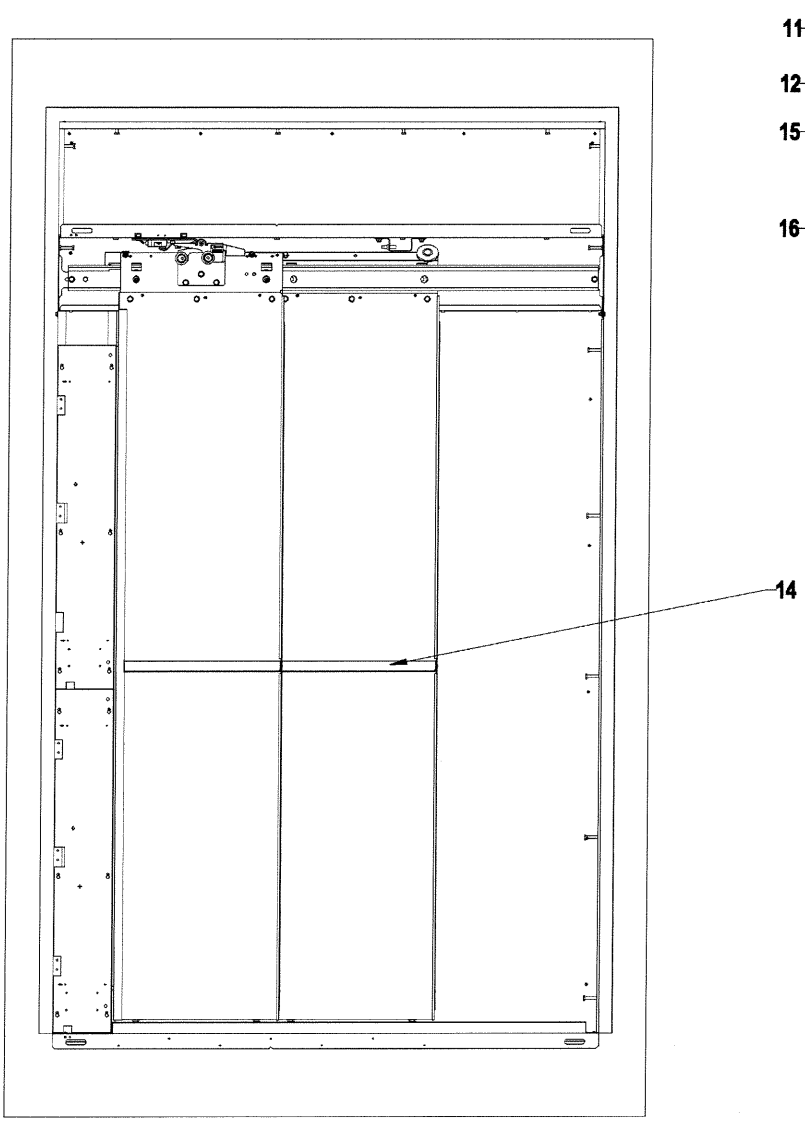


| OP | DIM1 | DIM2 | DIM3 |
|---|---|---|---|
| 700 | 1300 | 195 | 405 |
| 800 | 1470 | 195 | 475 |
| | 1540 | 265 | 475 |
| 900 | 1610 | 195 | 515 |

| FACADE | OPH | DIM4 | DIM5 |
|---|---|---|---|
| TF24 | 2000 | 2400 | 140 |
| TF | 2000 | 2500 | 240 |
| | 2100 | | 140 |
| TF27 | 2000 | 2700 | 340 |
| | 2100 | | 440 |

| IETM | DESCRIPTION |
|---|---|
| **15. Additional header** | |
| Material | Stainless steel or Pre-painted steel or Skinplate steel |
| Thickness | 1.5 mm |
| Vertical section dimensions | 20 mm X 75 mm X DIM mm X 75 mm X 20 mm |
| DIM | 140 mm for TF24 and OPH = 2000 mm<br>for TF and OPH = 2100 mm<br>240 mm for TF and OPH = 2000 mm<br>340 mm for TF27 and OPH = 2100 mm<br>440 mm for TF27 and OPH = 2000 mm |
| Length | DIM 1 mm |
| Fixing to header | 5 screws HM8 X 25 mm |
| **16. Additional header lateral stiffener** | |
| Material | Galvanized mild steel |
| Thickness | 1.5 mm |
| Overall size | DIM mm X 71 mm X 65 mm |
| DIM | 140 mm for TF24 and OPH = 2000 mm<br>for TF and OPH = 2100 mm<br>240 mm for TF and OPH = 2000 mm<br>340 mm for TF27 and OPH = 2100 mm<br>440 mm for TF27 and OPH = 2000 mm |
| Fixing to additional header | 4 rivets Ø4 X 8.5 |

### 6.2.3. Doors details

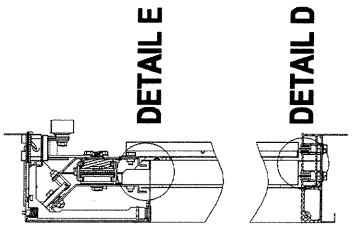


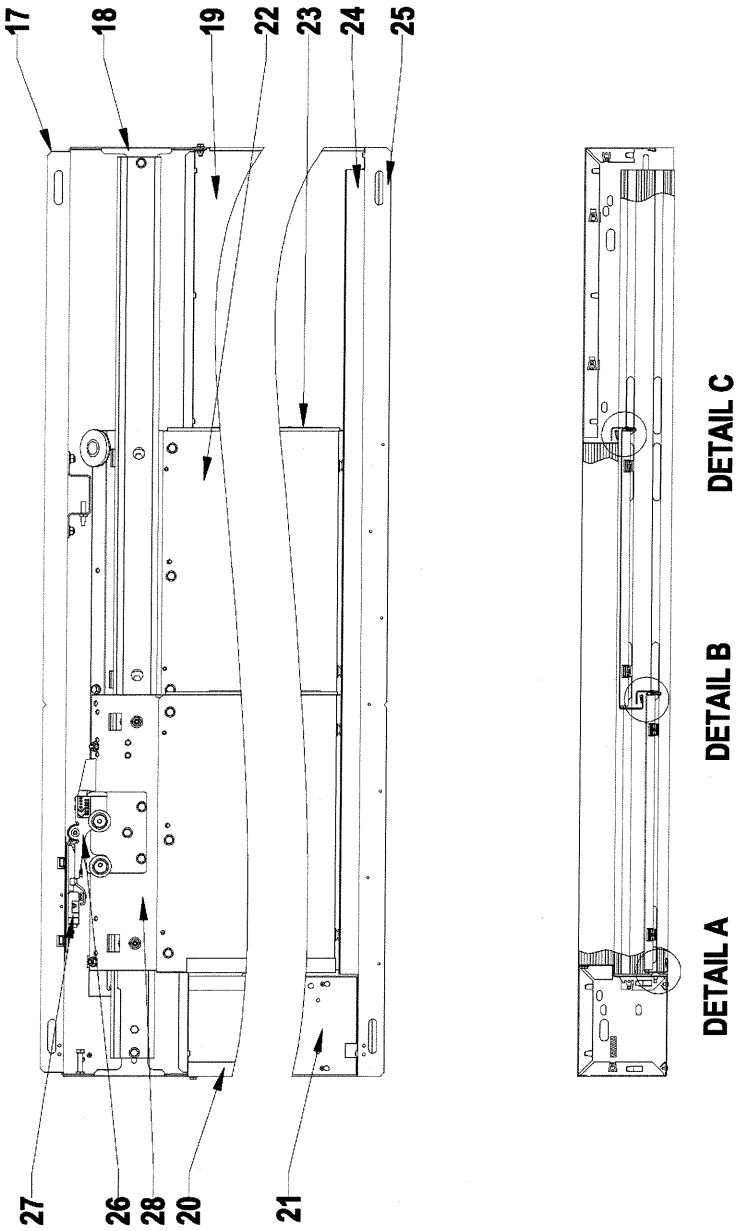


**OVERVIEW**

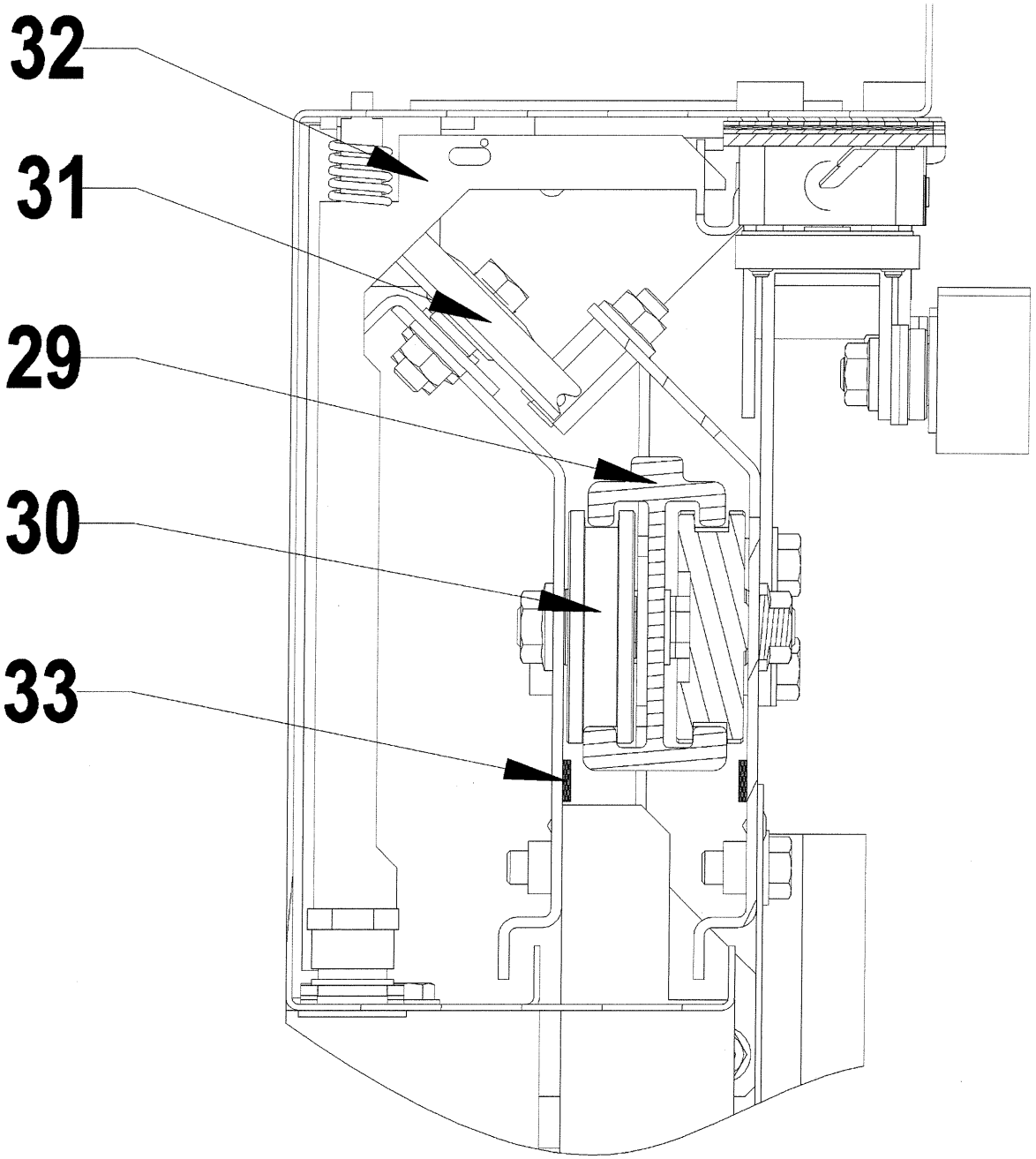


**HEADER DETAILS**

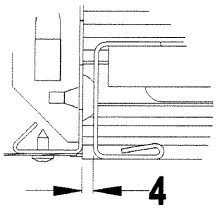


**DETAIL A**

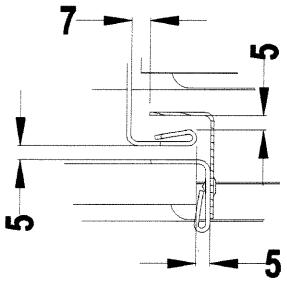


**DETAIL B**

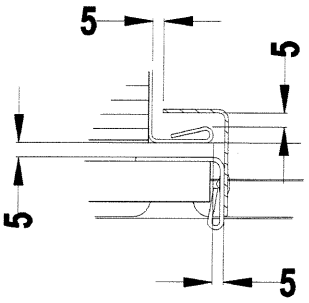


**DETAIL C**

**LABYRINTH GAPS DETAILS**

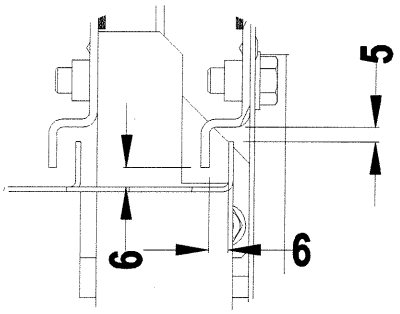


**DETAIL E**

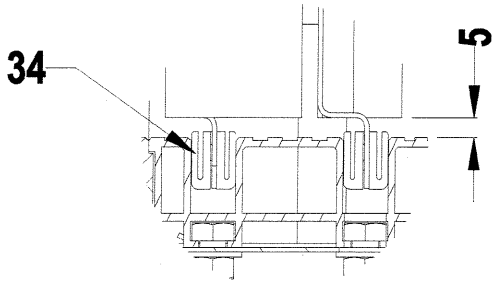


**DETAIL D**

**HEADER AND STILL DETAILS**

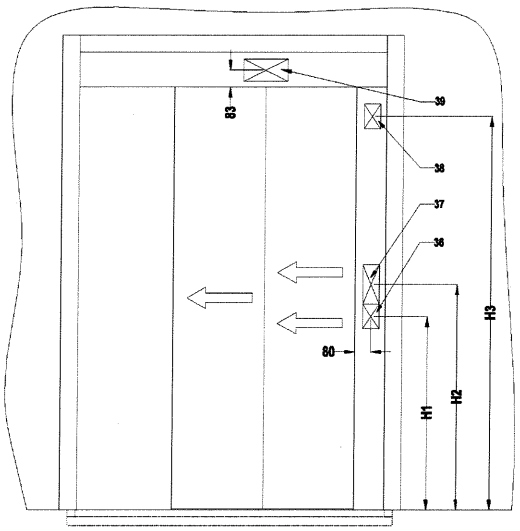


**TRF FACADE**

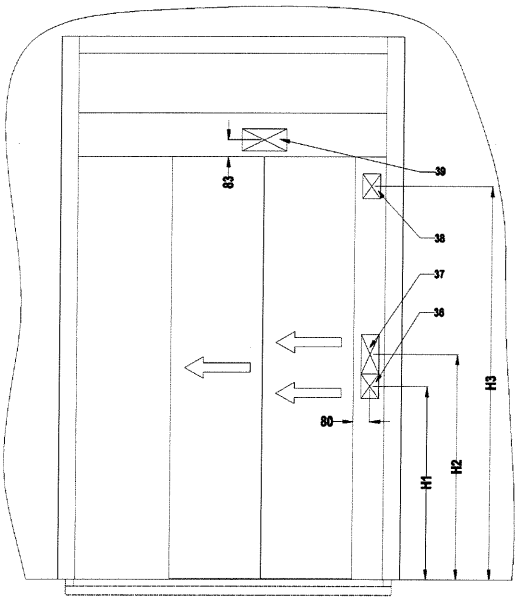


**TF24/TF/TF27 FACADE**

**BUTTON BOX DETAILS**

| IETM | DESCRIPTION |
|---|---|
| **17. Header** | |
| Material | Stainless steel or Pre-painted steel or Skinplate steel |
| Thickness | 1.5 mm |
| Vertical section dimensions | 15 mm X 108 mm X 217 X 153 mm X 40 mm |
| Length | DIM1 mm |
| **18. Lateral header stiffener** | |
| Material | Galvanized mild steel |
| Thickness | 2.5 mm |
| Overall size | 206 mm X 130 mm X 57 mm |
| Fixing to header | 3 clinching points on the top, 4 clinching points on the side |
| **19. Opening column** | |
| Material | Stainless steel or Pre-painted steel or Skinplate steel |
| Thickness | 1.2 mm |
| Horizontal section dimensions | 25 mm X 61 mm X DIM3 mm X 122 mm |
| Length | OPH mm |
| Fixing to header | 3 punched clips + 2 bolts HM8 X 16 mm |
| Fixing to sill support | 4 punched clips |
| **20. Closing column** | |
| Material | Stainless steel or Pre-painted steel or Skinplate steel |
| Thickness | 1.2 mm |
| Horizontal section dimensions | 25 mm X 93 mm X 20 mm X 61 mm X DIM2 mm X 153 mm X 25 mm |
| Length | OPH mm |
| Fixing to header | 3 punched clips + 2 bolts HM8 X 16 mm |
| Fixing to sill support | 4 punched clips |
| **21. Closing column plate** | |
| Material | Galvanized mild steel |
| Thickness | 0.8 mm |
| Overall size | 170 mm X 1014 mm |
| Fixing to closing column | 6 self-tapping screws Ø3.5 X 9.5 |

| IETM | DESCRIPTION |
|---|---|
| **22. Panel** | |
| Material | Stainless steel or Pre-painted steel or Skinplate steel |
| Thickness | 1.5mm |
| Horizontal section dimensions | 25 mm X 42 mm X OP / 2 + 37 mm X 26 mm |
| Vertical section dimensions | 23.5 mm X 16 mm X OPH + 48.5 mm |
| Fixing to slow hanger | 3 screws HM8 X 16 mm |
| **23. Panel labyrinth** | |
| Material | Galvanized mild steel |
| Thickness | 1.2 mm |
| Horizontal section dimensions | 23 mm X 38 mm |
| Length | OPH - 68 mm |
| Fixing to panel | 5 rivets Ø4 X 8.5 |
| **24. Sill** | |
| Material | Aluminium profile |
| Vertical section dimensions | 94 mm X 34 mm |
| Length | 3 X OP / 2 + 50 mm |
| **25. Sill support** | |
| Material | Galvanized mild steel |
| Thickness | 1.5 mm |
| Vertical section dimensions | 15 mm X 25 mm X 153 mm X 45 mm |
| Length | DIM1 mm |
| **26. Lock** | |
| Material | Mild steel |
| Rollers | Neoprene 70AS tire |
| Fixing to fast hanger | 3 bolts HM8 X 16 |
| **27. Switch** | |
| Type | Schmersal AZ14 |
| Fixing to latch | 2 bolts F90 M4 X 16 |
| **28. Hanger** | |
| Material | Galvanized mild steel |
| Thickness | 2.5 mm |
| Vertical section dimensions | 15 mm X 15 mm X 109 mm X 55 mm |
| Length | OP / 2 + 28 mm |
| **29. Rail** | |
| Material | Aluminium profile |
| Vertical section dimensions | 35 mm X 76 mm |
| Length | DIM1 - 50 mm |
| Fixing to lateral header stiffeners | 2 bolts HM8 X 16 |
| **30. Roller** | |
| Material | Nylon BESNO P40W or MB3000 tire |
| Size | Ø 56mm X 16 mm |
| Fixing to hanger | 1 nut HM10 |
| **31. Pulley** | |
| Material | Galvanized mild steel |
| Size | Ø 64mm X 14 mm |
| Fixing | 2 bolts HM8 X 16 |
| **32. Unlocking lever** | |
| Material | Galvanized mild steel |
| Thickness | 3 mm |
| Overallsize | 202 mm X 52 mm |
| **33. Intumescent seal (only for BESNO P40W roller)** | |
| Material | INTUMEX LFSK |
| Overall size | 2 mm X 10 mm X OP / 2 + 28 mm |
| Fixing to hanger | Adhesive tape |
| **34. Shoe** | |
| Material | PEBAX 7033 SN01 |
| Weight | 2.90 g |

| IETM | DESCRIPTION |
|---|---|
| **35. Switch (option)** | |
| Type | FAA177EB |
| Fixing to header | 2 screws HM4 X 35 mm |
| **36. Optional button box (option)** | |
| Cover | Stainless mild steel |
| Overall size | 83 mm X 123 mm X 20 mm |
| Fixing to closing column | 3 rivets Ø4.8 X 8.5 |
| **37. Button box (option)** | |
| Cover | Stainless mild steel |
| Overall size | 83 mm X 203 mm X 20 mm |
| Fixing to closing column | 3 rivets Ø4.8 X 8.5 |
| **38. Vertical position indicator (option)** | |
| Cover | Stainless mild steel |
| Overall size | 83 mm X 123 mm X 20 mm |
| Fixing to closing column | 4 rivets Ø4.8 X 8.5 |
| **39. Vertical position indicator (option)** | |
| Cover | Stainless mild steel |
| Overall size | 220 mm X 111 mm X 30 mm |
| Fixing to aesthetic lintel | 4 self-tapping screws Ø3.5 X 9.5 |

# 7. METHODS OF THE TEST

## 7.1. THERMAL PROGRAM

The rise in temperature of the furnace above ambient was led according to the conventional thermal program represented by the function:

$$T = 345 \log_{10}(8t+1) + 20$$

*where :* $t$ = *Time [min]*
$T$ = *Furnace temperature at the moment t [°C]*

## 7.2. FIRE SIDE

The specimen was exposed to the fire from the **landing side**.

# 8. RESULTS OF MAIN REFERENCE TEST

## 8.1. TEST N° 06-V-220 :

### 8.1.1. Integrity

*8.1.1..1. Leakage rate without corrections*

Duration : **ONE HUNDRED AND TWENTY ONE MINUTES** (121 min)
Limitation reason **Stop of the test on request of the Sponsor.**

*8.1.1..2. Leakage rate with corrections*

Duration : **ONE HUNDRED AND ONE MINUTES** (101 min)
Limitation reason **Maximum leakage rate reached.**

*8.1.1..3. Sustained flaming*

Duration : **ONE HUNDRED AND TWENTY ONE MINUTES** (121 min)
Limitation reason **Stop of the test on request of the Sponsor.**

### 8.1.2. thermal insulation

Duration : **NONE**
Limitation reason **Element considered as not ensuring any thermal insulation.**

### 8.1.3. Radiation

| | Radiation to a distance of 1m (kW/m²) |
|---|---|
| | 15 |
| Reached after | 76 min |

These results were obtained on the basis of maximum levels.

## 8.2. TEST N° 06-V-369 :

### 8.2.1. Integrity

*8.1.2..1. Leakage rate without corrections*

Duration : **ONE HUNDRED AND TWENTY SIX MINUTES** (126 min)
Limitation reason **Stop of the test on request of the Sponsor.**

*8.1.2..2. Leakage rate with corrections*

Duration : **ONE HUNDRED AND TWENTY SIX MINUTES** (126 min)
Limitation reason **Stop of the test on request of the Sponsor.**

*8.1.2..3. Sustained flaming*

Duration : **ONE HUNDRED AND TWENTY SIX MINUTES** (126 min)
Limitation reason **Stop of the test on request of the Sponsor.**

### 8.2.2. thermal insulation

Duration : **NONE**
Limitation reason **Element considered as not ensuring any thermal insulation.**

### 8.2.3. Radiation

| | Radiation to a distance of 1m (kW/m²) |
|---|---|
| | 15 |
| Reached after | 65 min |

These results were obtained on the basis of maximum levels.

For the description and results of these tests, refer to the classification reports n° 06-V-220 and 06-V-369.

## 9. ANALYSIS

- The two reference tests n° 06-V-220 and 06-V-369 were performed on a non-insulated landing door "PRIMA CLD TRF" and "PRIMA TF27" with two panels with central opening. These doors are made out of stainless steel. Mounting type : landing mounting.
  These two tests were chosen by the laboratory as the most unfavorable versions, in order to allow the validation of TLD version (telescopic opening), of the "TRF", "TF", "TF 24" and "TF 27" frame versions, of the Pre-painted steel or Skinplate steel versions, as well as other types of mounting.

- Stainless steel has a coefficient of expansion higher than raw steel (approximately 17 x $10^{-6}$ $K^{-1}$ opposed to 12 x $10^{-6}$ $K^{-1}$). During a fire, stainless steel will expand more than standard steel, creating greater stressing on the junction elements (labyrinth, screws and bolts...).
  During the two reference tests, performed on a stainless steel door, no opening was noted.
  Consequently, it is possible to affirm that no opening of this type will be able to appear with the "pre-painted" or "skinplate" steel configurations.

- Compared to the "hoistway mounting" type, the tested "landing mounting" type allows the evaluation of additional leakage rate which could occur by the peripheral telescopic elements. This elements are absent from the "hoistway mounting" version. Thus, it is possible to affirm that the leakage rate on a door with "hoistway mounting" type will be lower than that a door with "landing mounting" type.

- The test n° 06-V-322 performed on a "PRIMA TLD" door with a similar configuration made up electrozinged steel elements , showed that this kind of steel radiated more than the stainless steel. This observation requires to limit the classifications obtained by this range of doors according to the various possible finish (see § 10).

- The use of "MB3000 tire" rollers allows not to install the intumescent seal on the hanger. Indeed, this configuration was tested on similar doors during the test n° 06-V-369, no sustained flaming was noted on these levels until the end of the test, that is 126 minutes.

- The two fixation types of the door by "JORDHAL" screws and rails or by dowels, and the different angles described in paragraph 6.2.1. were tested on similar doors during different tests being part of this campaign.
  No difference of mechanical behavior was noted on these levels until the end of tests, that is 122 minutes.

- The test n° 06-V-322 performed on a door of similar configuration built in a concrete wall with a density of 1200 ± 200 kg/$m^3$ showed no behavior difference on the junction frame / wall with doors tested in a concrete wall with a density of 2200 ± 200 kg/$m^3$.

# 10. RANGE CLASSIFICATION

## 10.1. CLASSIFICATION REFERENCE

Range classifications are given according to the paragraph 17. of standard EN 81-58.

## 10.2. CLASSIFICATIONS

### 10.2.1. Pre-painted steel or Skinplate steel doors

| E | I | W | | t |
|---|---|---|---|---|
| **E** | | **W** | | **30** |
| **E** | | | | **120** |

### 10.2.2. Stainless steel doors

| E | I | W | | t |
|---|---|---|---|---|
| **E** | | **W** | | **60** |
| **E** | | | | **120** |

# 11. DIRECT FIELD OF APPLICATION

## 11.1. LIMITATION OF DIMENSIONS

According to the paragraph 16 of standard EN 81-58, authorised door dimensions are as follows :

### 11.1.1. TRF version

| | *Door's clear opening's dimensions* | | *Wall's opening's dimensions* | |
|---|---|---|---|---|
| | Minimal | Maximum | Minimal | Maximum |
| Width (mm) | 630 | 1170 | 1230 | 2275 |
| Height (mm) | unlimited | 2415 | unlimited | 2700 |

### 11.1.2. TF, TF24, TF27 versions

| | *Door's clear opening's dimensions* | | *Wall's opening's dimensions* | |
|---|---|---|---|---|
| | Minimal | Maximum | Minimal | Maximum |
| Width (mm) | 630 | 1170 | 1230 | 2275 |
| Height (mm) | unlimited | 2415 | unlimited | 3105 |

## 11.2. SUPPORTING CONSTRUCTION

According to paragraph 16. of standard EN 81-58, the classifications indicated in paragraph 10. of this range report are valid for all supporting constructions with a density equal or greater than 600 kg/m$^3$ and thickness equal or greater than 100 mm.

Maizières-lès-Metz, France, June 25th , 2007

**Renaud SCHILLINGER**
Project Leader
P.O. Serge VISSE

**Régis KORYLUK**
Head of Section
Testing and Consultancy Section

efectis france

SASU au capital de 1 512 170 €
RCS Versailles B 490 550 712 - Code NAF 743 B
N° TVA : FR 61 49 0550 712

# FIRE RESISTANCE TEST OF BUILDING ELEMENTS

*According to the European Standard EN 81-58*

## EXPERT JUDGMENT

| *Expert Judgment n°* | *On range report n°* |
|---|---|
| **07/1** | **06-A-341** |
| **07/1** | **07-A-059** |
| **07/1** | **07-A-060** |
| **07/1** | **07-A-113** |
| **07/1** | **07-A-114** |

*Sponsor* : **OTIS**
**Centre Produit Neuf**
**Avenue des Montoires**
**F - 45504 GIEN Cédex**

*Scope* : **Replacement of the add-on labyrinth by integrated labyrinth**

This Expert Judgment is only valid by coming with its reference range report.

It is not cumulable with an other expert judgment referring to this same range report, except explicit mention in the text.

**This document comprises 5 pages.**
**Only a full copy of this range report permits a normal utilization**

## 1. DESCRIPTION OF MODIFICATIONS

The landing doors subjects of the reference range reports can be modified as follows :

The add-on labyrinth tested can be replaced by integrated labyrinth.

During the references tests of the range reports mentioned the labyrinth between panels was made as follows: panels thick 15/10 mm were folded into "C", then an add-on sheet steel labyrinth folded into "L" thick 12/10 was fixed by rivets on one of side of the panel.

These add-on labyrinth are suppressed and the labyrinth are carried out directly by folding panel into "Z". The dimensional details of these changes are set out on the plates n° 1 to 3.

## 2. CONCLUSIONS JUSTIFICATIONS

The overlap of the labyrinth and the labyrinth gaps remain the same as those tested.

This system also allows to escape the breaks of add-on labyrinth rivets, regularly observed during references tests.

The mechanical strength of the integrated labyrinth chicane (folding sheet of 15/10 mm) is higher than the mechanical strength of the add-on labyrinth (folding sheet of 12/10 mm).

Finally, this type of labyrinth was tested at identically during the test No 07-V-196, on telescopic opening door "PRIMA TLD TRF" with two panels, clear opening dimensions 900 x 2100 mm (w x h). During this test, no opening was noted between the fast panel and the slow panel or between the slow panel and the opening column until the end of test, that is 122 minutes.

Note: The elevation of leakage rate noted during this test, measured from the 90th minute has been clearly identified as due to the openings observed at the level of lateral telescopic elements after the melting of glass wool insulated them. Under no circumstances, this result can be attributed to new chicanes.

## 3. CONDITIONS TO RESPECT

The gaps and the overlap of the labyrinth will be identical to those tested.

All the conditions of validity of the classifications stated in the reference range reports will be observed.

## 4. CONCLUSIONS

The performances of lift landing doors, subjects of references range reports, are preserved.

Maizières-lès-Metz, France, December 18th , 2007

**Renaud SCHILLINGER**
Project Leader

**Régis KORYLUK**
Head of Section
Testing and Consultancy Section

**Plate n° 1 – Differences between the two types of labyrinth**

## PANEL WITH INTEGRATED LABYRINTH

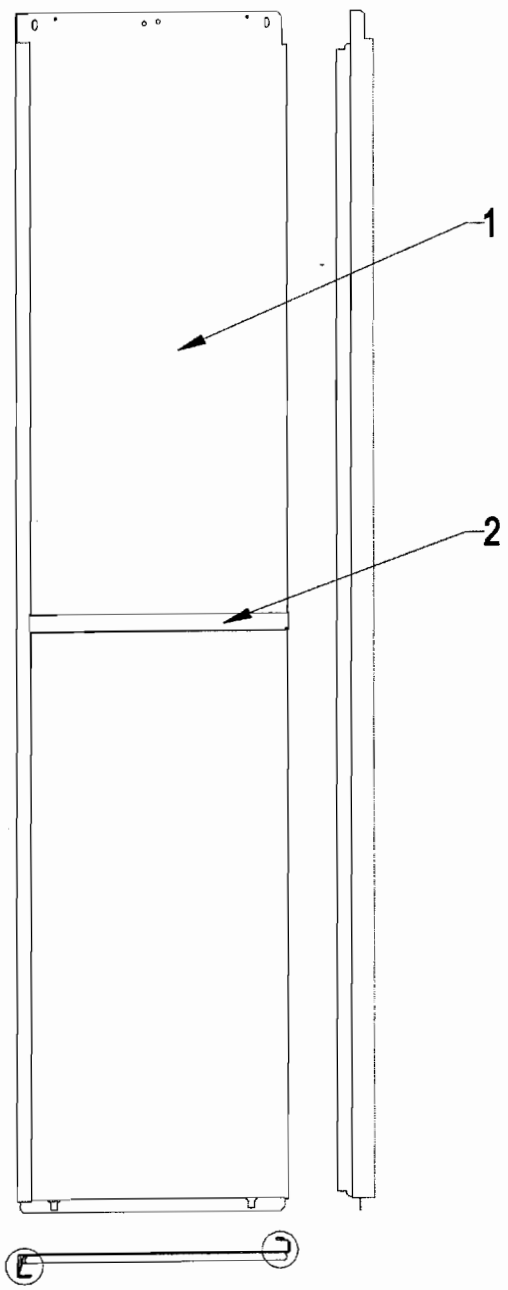


## PANEL WITH SEPARATED LABYRINTH

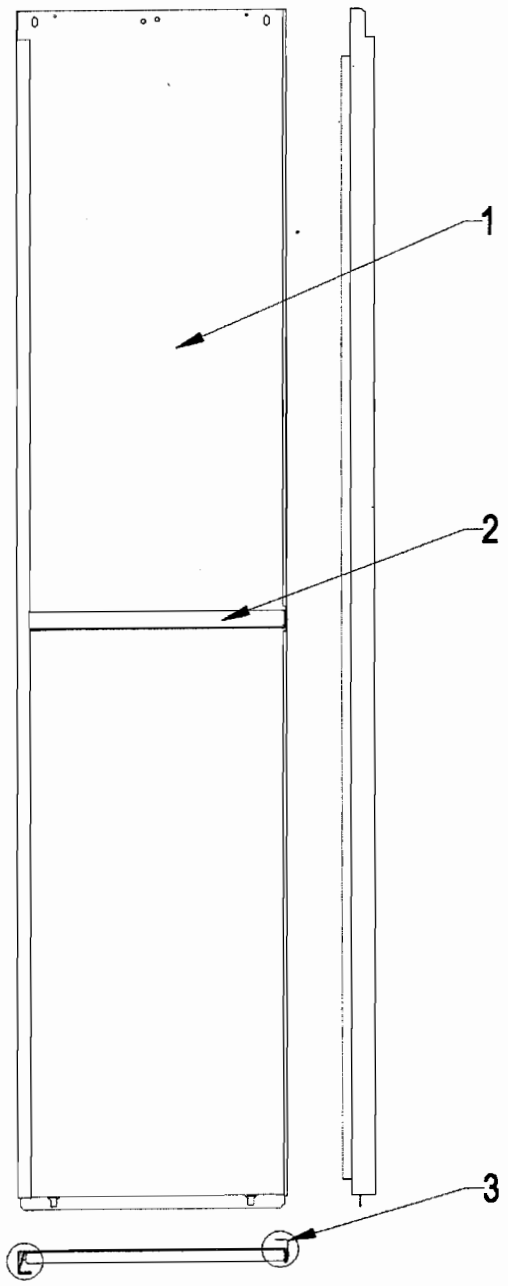

**Plate n° 2 – Details**

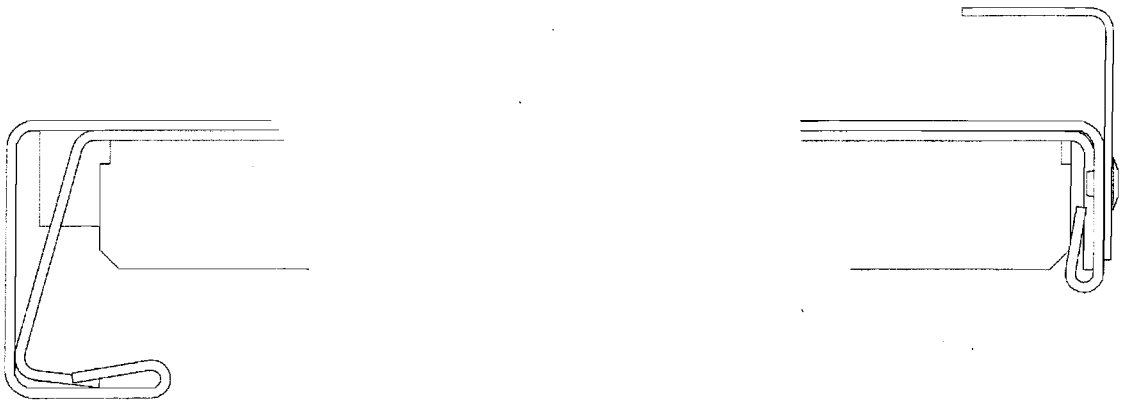

PANEL WITH SEPARATED LABYRINTH



PANEL WITH INTEGRATED LABYRINTH

**Plate n° 3 – Nomenclature**

| ITEM | DESCRIPTION OF PANEL WITH ADD-ON LABYRINTH | DESCRIPTION OF PANEL WITH INTEGRATED LABYRINTH |
|---|---|---|
| **1. Panel frame** | | |
| Material | Stainless steel or Pre-painted steel or Skinplate steel | Stainless steel or Pre-painted steel or Skinplate steel |
| Thickness | 1.5 mm | 1.5 mm |
| Horizontal section dimensions | | |
| ➢ PRIMA TLD panels & Slow PRIMA-S TLD panels | 25 X 42 X (OP / 2 + 37) X 26 mm | 25 X 42 X (OP / 2 + 39) X 23 X 23 mm |
| ➢ PRIMA & PRIMA-S CLD panels | 25 X 42 X (OP / 2 + 28) X 26 mm | 25 X 42 X (OP / 2 + 30) X 23 X 23 mm |
| ➢ Fast PRIMA-S TLD panels | 25 X 28 X (OP / 2 + 37) X 26 mm | 25 X 28 X (OP / 2 + 39) X 23 X 23 mm |
| Vertical section dimensions | | |
| ➢ PRIMA panels & PRIMA-S CLD panels & slow PRIMA-S TLD panels | 23.5 X 16 X (OPH + 48.5) mm | 23.5 X 16 X (OPH + 48.5) mm |
| ➢ Fast PRIMA-S TLD panels | 23.5 X 10 X (OPH + 48.5) mm | 23.5 X 10 X (OPH + 48.5) mm |
| Fixing to fast hanger | 3 screws HM8 X 16 | 3 screws HM8 X 16 |
| **2. Panel stiffener (only if OP ≥ 900 mm)** | | |
| Material | Galvanized mild steel | Galvanized mild steel |
| Thickness | 1.5 mm | 1.5 mm |
| Overall size | | |
| ➢ PRIMA panels & PRIMA-S CLD panels & slow PRIMA-S TLD panels | 32 X 39 X (OP / 2 + 34) mm | 32 X 60 X (OP / 2 + 39) mm |
| ➢ Fast PRIMA-S TLD panels | 32 X 25 X (OP / 2 + 34) mm | 32 X 46 X (OP / 2 + 39) mm |
| Fixing to panel | 1 rivet Ø4 X 8.5 | 1 rivet Ø4 X 8.5 |
| **3. Panel labyrinth** | | |
| Material | Galvanized mild steel | |
| Thickness | 1.2 mm | |
| Horizontal section dimensions | 23 X 38 mm | |
| Length | OPH - 68 mm | |
| Fixing to panel | 5 rivets Ø4 X 8.5 | |

efectis
france

SASU au capital de 1 512 170 €
RCS Evry B 490 550 712 - Code APE 7120 B
N° TVA : FR 61 49 0550 712

# FIRE RESISTANCE TEST OF BUILDING ELEMENTS

*According to the European Standard EN 81-58*

## EXPERT JUDGMENT

| *Expert Judgment n°* | *On range report n°* |
|---|---|
| **08/2** | **06-A-341** |
| **08/2** | **07-A-114** |

*Sponsor* : **OTIS**
**Centre Produit Neuf**
**Avenue des Montoires**
**F - 45504 GIEN Cédex**

*Scope* : **Modification of the fixing method of the closing column plates and interchangeability of these plates between the different range.**

This Expert Judgment is only valid by coming with its reference range report.

It must not be use concurrently with other expert judgments referring to these same range reports, except explicit mention in the text.

**This document comprises 6 pages.**
**Only a full copy of this document permits a normal utilization**

Siège
Espace Technologique
Bâtiment Apollo - Route de l'Orme des merisiers
F 91193 Saint-Aubin
Tél : 33 (0)1 60 13 83 80 Fax : 33 (0)1 60 13 70 80
SIRET n° 490 550 712 00031

france@efectis.com
www.effectis.com

Laboratoire
Voie Romaine
F 57280 Maizières-les-Metz
Tél : 33 (0)3 87 51 11 11
Fax : 33 (0)3 87 51 10 58
SIRET n° 490 550 712 00023

## 1. DESCRIPTION OF MODIFICATIONS

The closing column plate of the two kind of landing doors can be modified as follow :

***1. Modification of the doors "PRIMA TLD SPF" (report n° 06-A-341)***

See plates n° 1 et 2.

This modification concerns the fixing method of the closing column plate. These plates can be maintained by clips to replace the fixing by screws HM6 x 16 mm.

***2. Modification of the doors « PRIMA TLD E 120 » (report n° 07-A-114)***

See plates n° 3 et 4.

The doors "PRIMA TLD E120" can be equipped with closing column plates tested on doors" PRIMA TLD SPF.

## 2. CONCLUSIONS JUSTIFICATIONS

The fixing method of the closing column plates by clips had been tested on a "PRIMA TLD E 120" door during the test n° 07-V-196.

No opening or no difference of behaviour had been observed at this location until the end of the test, that is 122 minutes.

Moreover, the interchangeability of these closing column plates have no influence on the mechanical behaviour of the closing column. Therefore, the installation of the closing column plate as described in paragraph 1. does not diminish the performances of fire resistance of the considered doors.

## 3. CONDITIONS TO RESPECT

All the conditions of validity of the classifications stated in the reference range reports will be observed.

## 4. CONCLUSIONS

The performances of lift landing doors, subjects of references range reports, are preserved.

This expert judgment can be use concurrently with previous expert judgments.

Maizières-lès-Metz, France, May 27th, 2008

**Renaud SCHILLINGER**
Project Leader

**Régis KORYLUK**
Head of Section
Testing and Consultancy Section

**Plate n° 1 – Fixing method evolution of the closing column plates**

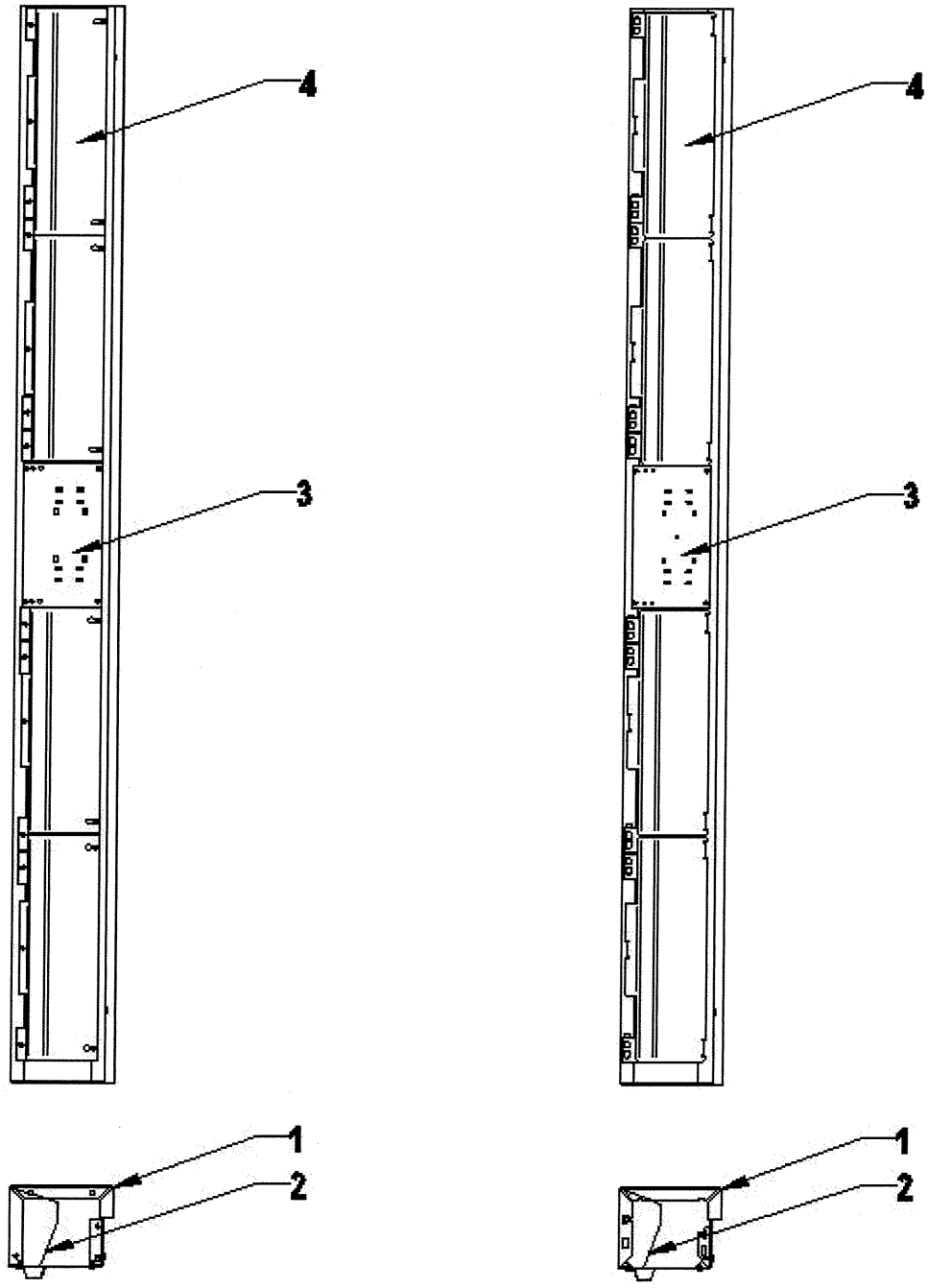


*Seule la reproduction intégrale de ce document permet l'exploitation normale des résultats.*

**Plate n° 2 – Schedule**

| ITEM | CLOSING COLUMN DESCRIPTION 06-A-341 | NEW COLUMN DESCRIPTION |
|---|---|---|
| **1. Closing column** | | |
| Material | Electrozingued mild steel or pre-painted mild steel | Electrozingued mild steel or pre-painted mild steel |
| Thickness | 1.2 mm | 1.2 mm |
| Horizontal section dimensions | 25 X 153 X 193 X 61 X 20 X 93 X 25 mm | 25 X 153 X 193 X 61 X 20 X 93 X 25 mm |
| Length | OPH mm | OPH mm |
| Fixing to sill support | 5 screws HM6 X 16 mm or 5 punched clips | 5 screws HM6 X 16 mm or 5 punched clips |
| Fixing to header | 3 screws HM6 X 16 mm or 1 screw HM6 x 16 mm and 2 punched clips | 3 screws HM6 X 16 mm or 1 screw HM6 x 16 mm and 2 punched clips |
| Fixing to lateral header stiffener | 1 screw HM6 X 16 mm | 1 screw HM6 X 16 mm |
| **2. Closing column angle** | | |
| Material | Galvanized mild steel | Galvanized mild steel |
| Thickness | 0.5 mm | 0.5 mm |
| Overall size | 87 X 152 X 395 mm | 87 X 152X 395 mm |
| Fixing to column | 2 self-tapping screws 3.9 X 13 mm | 2 punched clips |
| **3. Magnet plate** | | |
| Material | Galvanized mild steel | Galvanized mild steel |
| Thickness | 1.2 mm | 1.2 mm |
| Overall size | 146 X 217 mm | 146 X 217 mm |
| Fixing to column | 4 self-tapping screws 3.9 X 13 mm | 4 self-tapping screws 3.9 X 13 mm |
| **4. Closing column plate** | | |
| Material | Galvanized mild steel | Galvanized mild steel |
| Thickness | 0.5 mm | 0.5 mm |
| Overall size | 140 X 427 X 21 mm | 140 X 427 X 21 mm |
| Fixing to column | 3 self-tapping screws 3.9 X 13 mm | 3 punched clips |

*Seule la reproduction intégrale de ce document permet l'exploitation normale des résultats.*

**Plate n° 3 – Interchangeability of the closing column plates**

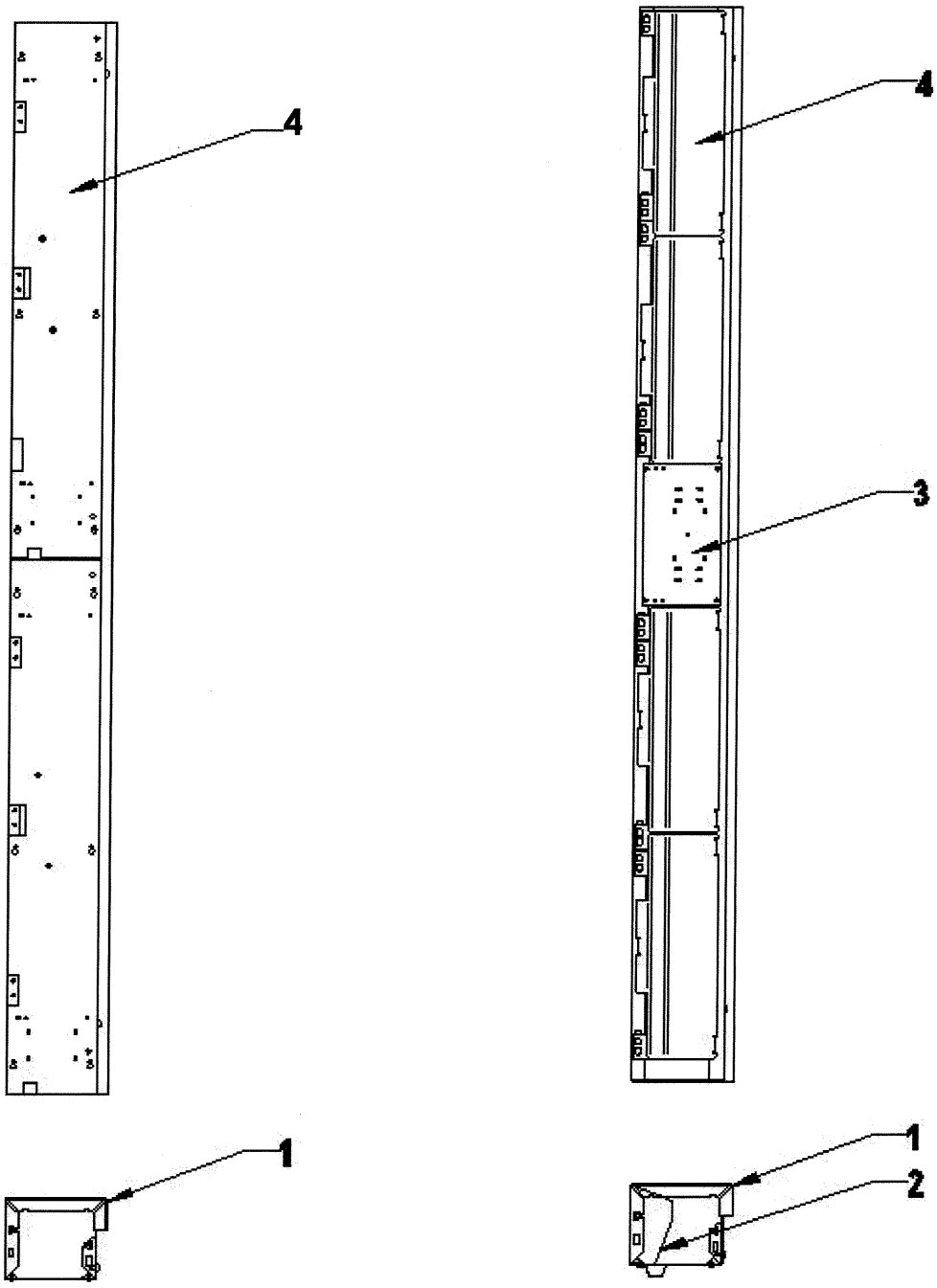


*Seule la reproduction intégrale de ce document permet l'exploitation normale des résultats.*

**Plate n° 4 – Schedule**

| ITEM | CLOSING COLUMN DESCRIPTION 07-A-114 | OPTIONAL CLOSING COLUMN DESCRIPTION |
|---|---|---|
| **1. Closing column** | | |
| Material | Stainless steel or Pre-painted steel or Skinplate steel | Stainless steel or Pre-painted steel or Skinplate steel |
| Thickness | 1.2 mm | 1.2 mm |
| Horizontal section dimensions | 25 X 93 X 20 X 61 X 195/265 mm X 153 X 25 mm | 25 X 93 X 20 X 61 X 195/265 X 153 X 25 mm |
| Length | OPH mm | OPH mm |
| Fixing to header | 3 punched clips + 2 bolts HM8 X 16 mm | 3 punched clips + 2 bolts HM8 X 16 mm |
| Fixing to sill support | 4 punched clips | 4 punched clips |
| **2. Closing column angle** | | |
| Material | | Galvanized mild steel |
| Thickness | | 0.5 mm |
| Overall size | | 87 X 152X 395 mm |
| Fixing to column | | 2 punched clips |
| **3. Magnet plate** | | |
| Material | | Galvanized mild steel |
| Thickness | | 1.2 mm |
| Overall size | | 146/216 X 217 mm |
| Fixing to column | | 4 self-tapping screws 3.9 X 13 mm |
| **4. Closing column plate** | | |
| Material | Galvanized mild steel | Galvanized mild steel |
| Thickness | 0.8 mm | 0.5 mm |
| Overall size | 170 X 1014 mm | 140 X 427 X 21 mm |
| Fixing to closing column | 6 self-tapping screws Ø3.5 X 9.5 | 3 punched clips |

*Seule la reproduction intégrale de ce document permet l'exploitation normale des résultats.*

efectis
france

SASU au capital de 1 512 170 €
RCS Evry B 490 550 712 - Code APE 7120 B
N° TVA : FR 61 49 0550 712

# FIRE RESISTANCE TEST OF BUILDING ELEMENTS

*According to the European Standard EN 81-58*

## EXPERT JUDGMENT

| *Expert Judgment n°* | *On range report n°* |
|---|---|
| **09/2** | **07 – A – 059** |
| **09/2** | **07 – A – 060** |
| **09/2** | **07 – A – 080** |
| **09/2** | **07 – A – 081** |
| **09/2** | **07 – A – 113** |
| **09/2** | **07 – A – 114** |

*Sponsor* : **OTIS**
**Centre Produit Neuf**
**Avenue des Montoires**
**F - 45504 GIEN Cédex**

*Scope* : **Modification of the assembly of the buttons.**

This Expert Judgment is only valid by coming with its reference range report.

It is not cumulable with an other expert judgment referring to this same range report, except explicit mention in the text.

**This document comprises 2 pages.**
**Only a full copy of this range report permits a normal utilization**

## 1. DESCRIPTION OF THE MODIFICATION

The buttons, initially placed into a button box, can be inserted directly into the column by means of cuttings whose diameter is 28 mm. For a door with stainless steel aesthetics parts, the cutting whose diameter is 28 mm is made into the aesthetic part, and a squared cutting whose dimensions are 50 x 136 mm is made into the column.

In case of a two-buttons configuration, the gap between the cuttings is 40 mm.

## 2. CONCLUSIONS JUSTIFICATIONS

The lift landing doors objects of the reference range reports are equipped with a stainless steel button box, whose dimensions are 83 x 200 x 20 mm. An oblong cutting whose dimensions are 7 x 42 mm is realized into the column.

The integration of the buttons into the column, by means of two cuttings whose diameter is 28 mm, allows to remove the button box and to limit the quantity of material at this place. It is possible to affirm that the modification described in section 1 can't modify fire integrity, thermal insulation and radiation performances of lift landing doors objects of the reference range reports.

## 3. CONDITIONS TO RESPECT

The modification described in section 1 only concerned the assembly of the buttons. The reference and the composition of these buttons remain the same.

All the conditions of validity of the classifications stated in the reference range reports will be observed.

## 4. CONCLUSIONS

The performances of lift landing doors, objects of the reference range reports, are preserved.

This expert judgment can be use concurrently with previous expert judgments.

Maizières-lès-Metz, France, September 2nd 2009

**Jérôme VISSE**
Project Leader

**Régis KORYLUK**
Deputy Director "Operations"
Head of Section Testing

*Only a full copy of this Expert Judgment permits a normal utilization.*

Otis
A United Technologies Company

**New Equipment Center**
Avenue des Montoires
45504 GIEN Cedex
France

# Fire resistance Test of Building Elements

**According the EN 81-58 standard: 2003**

# ADDENDUM n° 2679-46-50

## attached to the range report N° 07-A-113 & 07-A-114

| *Reference tests n°:* | *Performed on the:* |
|---|---|
| **2674 - 44 - 50** | **10 July 2009** |

*Scope:*

## Option added: Telescopic elements without glass wool

## « PRIMA TLD / CLD – TRF / TF Facade »

## E120

This addendum is valid only when accompanied with its reference range report.
It may not be added to other addendum related with this same range report, unless mentioned explicitly in the text.
This document is a translation of the “Additif N° 2679-46-50”
In case of litigation, only French version prevails.

*Requester:*

**OTIS**
**New Equipment center**
**Avenue des Montoires**
**F – 45504 GIEN Cedex**

**This addendum report includes 8 pages. Its reproduction is authorized only in its full form.**

## 1 MODIFICATION DESCRIPTIONS

PRIMA E120 TLD & CLD door ranges have telescopic element parts (Option) for providing building and landing door junction. Referenced range reports were based on telescopic element option which used glass wool for providing E120 classification.

A new telescopic element option has been designed to cancel glass wool using with equivalent fire behaviour E120 classification.

Additionally, this new design is completely interchangeable with current PRIMA door products, without major modifications.

## 2 CLASSIFICATION JUSTIFICATION

Based on PRIMA door previously classified and conform to concerned range report, new telescopic element option has been installed, in place of previous telescopic element option. (With Glass wool) Others door components (Lintel, columns, panels, sill crosshead, building fixations) remains unchanged.
The objective of a classification test is to validate fully fire resistance behaviour. (As per EN81-58:2003)

This validation is based on one classification test representative of the worse condition:

- PRIMA TRF door / stainless steel finish / CLD 900 x 2100: This door configuration is the worse case in term of fire exposed door surface. (CO, Maximum Opening Passage Height, maximum Opening Passage Wide) Stainless steel finish is more critical in term of deformations. (Classification test N° 2674-44-50)

  Based on this classification test, all risks factors which can be affect door integrity have been checked with success. E 120 classification criteria have been validated.

## 3 REFERENCE TEST

| Test N° | Date | Free passage dimensions |
|---|---|---|
| 2674-44-50 | 10 July 2009 | 900 x 2100 mm (l x h) |

*This document may be reproduced only under its full form.*

# 4 DESCRIPTIONS

## *4.1 Initial configuration with glass wool. (See referenced range report)*

| ITEM | DESCRIPTION |
|---|---|
| **1. Lateral telescopic element**<br>Material<br>Thickness<br>Horizontal dimensions / cross section<br>Length | <br>Stainless steel or Pre-paint steel or “Skinplate” steel.<br>1.2 mm<br>15 mm X 20 mm X 85 mm X 100 mm<br>2300 mm to 2740 mm |
| **2. Glass wool**<br>Material<br>Density<br>Section | <br>Glass wool<br>22 kg/m3<br>60 mm X 150 mm |
| **3. Upper telescopic element**<br>Material<br>Thickness<br>Horizontal dimensions / cross section<br>Length | <br>Stainless steel or Pre-paint steel or “Skinplate” steel.<br>1.2 mm<br>11 mm X 12 mm X 85 mm X 90 mm<br>See DIM 1 |
| **4a. Lateral fixing elements**<br>Column / structural header / additional header | <br>7 screw self-tapping 3.9 X 9 mm |
| **4b. Upper fixing elements**<br>additional header | <br>5 screw self-tapping 3.9 X 9 mm |
| **5a. Lateral building fixing elements** | 7 screw HM8 X 80 mm |
| **5b. Upper building fixing elements** | 5 screw HM8 X 80 mm |

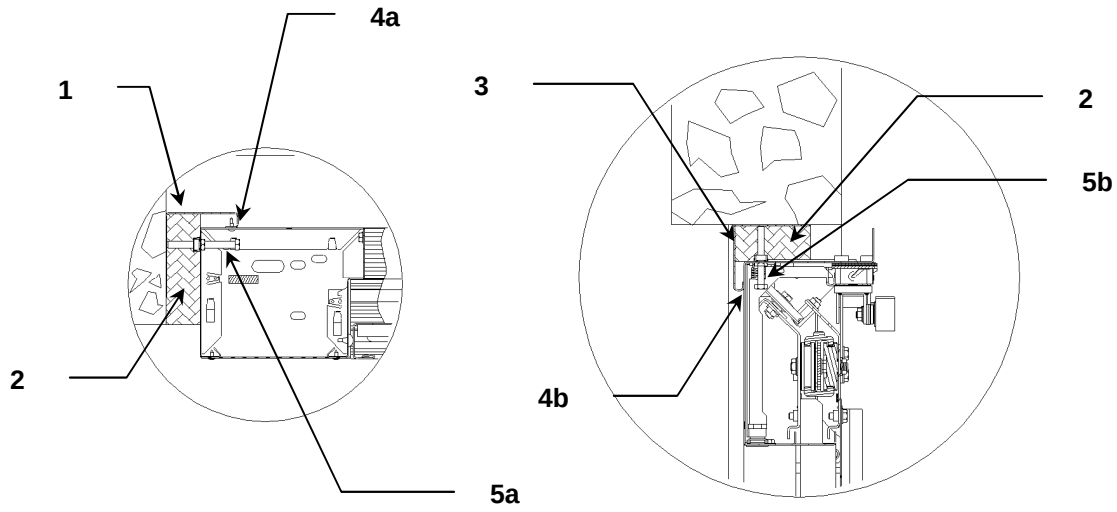


*This document may be reproduced only under its full form.*

## 4.2 Tested configuration. (Without glass wool)

***Central Opening***

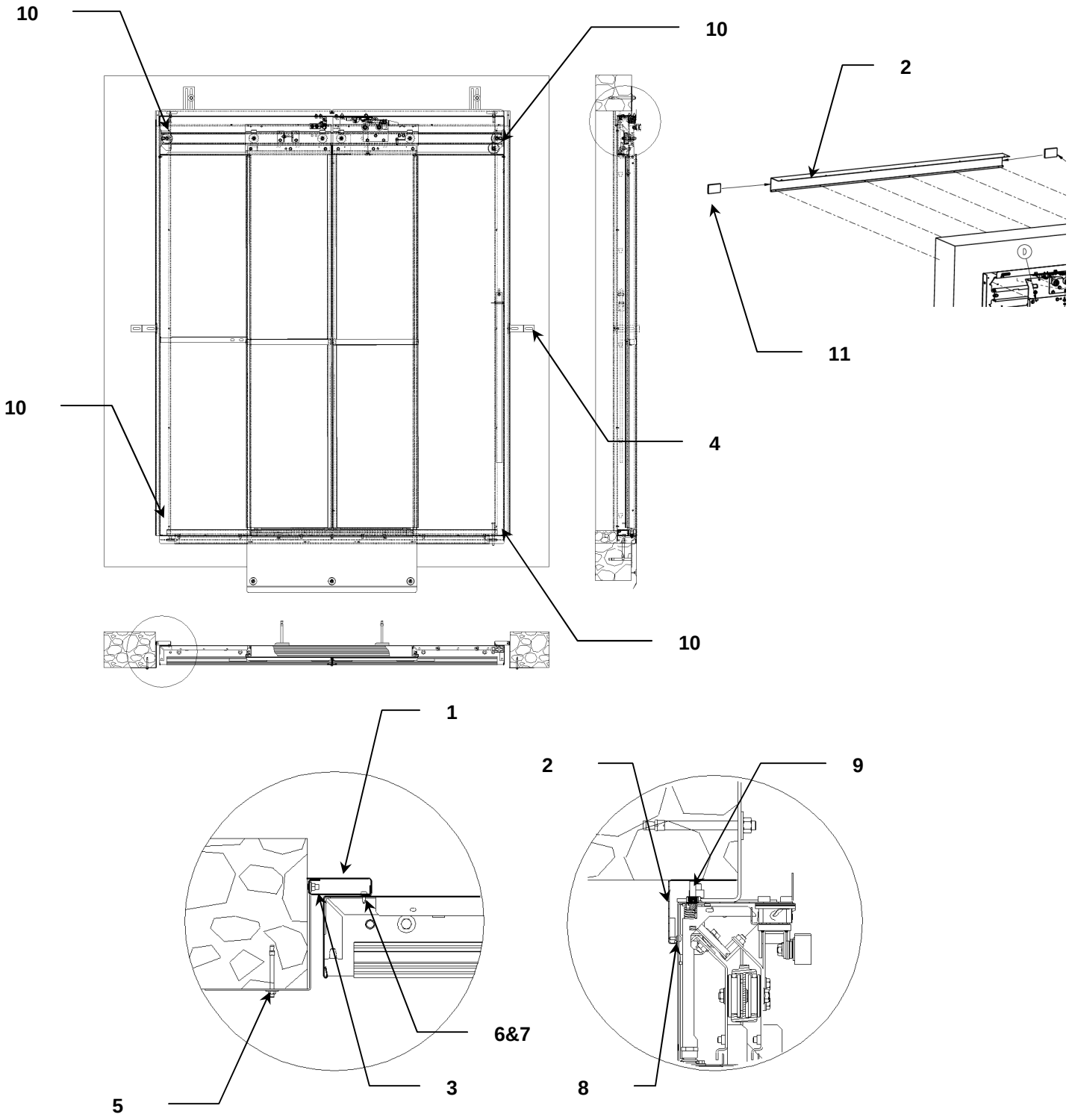


*This document may be reproduced only under its full form.*

***Telescopic landing door***

Telescopic elements have same design for Center Opening configuration

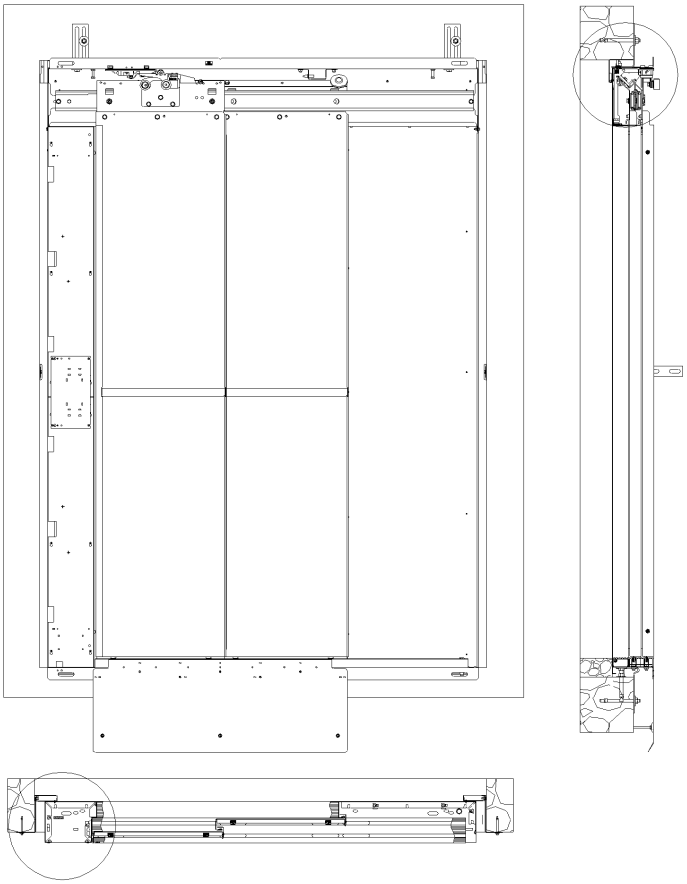

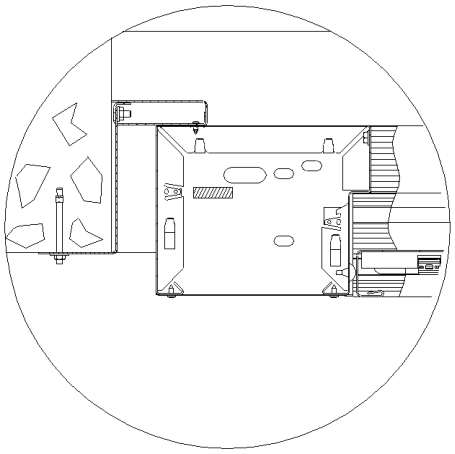

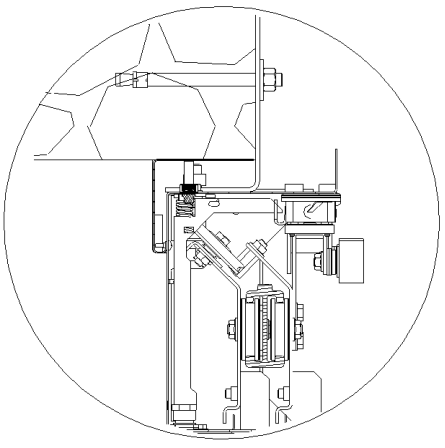

*This document may be reproduced only under its full form.*

| ITEM | DESCRIPTION |
|---|---|
| **1. Lateral telescopic element**<br>Material<br>Thickness<br>Horizontal dimensions / cross section<br>Length | <br>Stainless steel or Pre-paint steel or “Skinplate” steel.<br>1.2 mm<br>13.1 mm X 23.7 mm X 86 mm<br>Clear opening vertical distance |
| **2. Upper telescopic element**<br>Material<br>Thickness<br>Horizontal dimensions / cross section<br>Length | <br>Stainless steel or Pre-paint steel or “Skinplate” steel.<br>1.2 mm<br>90 mm X 85 mm X 12 mm X 10.5<br>DOFRW (Door width) |
| **3. Lateral telescopic element support**<br>Material<br>Thickness<br>Horizontal dimensions / cross section<br>Length | <br>Galvanized steel<br>1.5 mm<br>12 mm X 82.6 mm X 20.5 mm X 15 mm<br>Clear opening vertical distance |
| **4. Building fixing fixation with element**<br>Material<br>Thickness<br>Width<br>Length | <br>Galvanized steel<br>1.5 mm<br>40mm<br>280 mm |
| **5. Building fixing fixation with building** | <br>2 x 1 dowel HILTI HSA M8 X 92 + nuts HM8 |
| **6. Washers** | PA6.6 V2 (Polyamide)<br>8.8 x 2.2 mm |
| **7. telescopic element support fixing**<br>Lintel / columns | <br>Screw self-tapping Ø 3.9 X 12 |
| **8. Upper telescopic element fixing**<br>Lintel | <br>Screw self-tapping Ø 3.9 X 12 |
| **9. Upper telescopic element**<br>Building | <br>2 screw HM8 X 80 |
| **10. Lateral telescopic element locking**<br>Telescopic elements / columns / lintel | <br><br>2 x 2 stainless steel rivets Ø 4 X 12 |
| **11. Insulation plate**<br>Material<br>Thickness<br>Width<br>Length | <br><br>Supalux S<br>8 mm<br>54 mm<br>84 mm |

*This document may be reproduced only under its full form.*

# 5 RESULTS

## *5.1 Test N°2674-44-50*

### 5.1.1 Integrity

#### 5.1.1.1 Non-corrected leak rate

Time : **ONE HUNDRED AND TWENTY ONE MINUTES. (121 min)**
Cause of the limitation **Test stopped by Requester**

#### 5.1.1.2 Corrected leak rate

Time : **ONE HUNDRED AND TWENTY ONE MINUTES. (121 min)**
Cause of the limitation **Test stopped by Requester**

#### 5.1.1.3 Sustained inflammation

Time : **TWENTY HEIGHT MINUTES. (28 min)***
Cause of the limitation **Flame appearance > 10 s observed**
* Safety switch Inflammation (Prototype)

### 5.1.2 Thermal insulation

Time : **NONE**
Cause of the limitation **Element not ensuring thermal insulation.**

### 5.1.3 Radiation

Time : **ONE HUNDRED AND TEN MINUTES. (110 min)**
Cause of the limitation **Thermal flow 15 kW/m² reached**

For the description and results of this test, refer to the classification report N° 2674-44-50.

*This document may be reproduced only under its full form.*

# 6 CONCLUSIONS / RESTRICTIONS

At the end of different classification tests performed to cover any variability in this range, the following comments were issued:

- Classification criteria remains unchanged :

### Pre-paint or « Skinplate » door

| E | I | W | | (t) |
|---|---|---|---|---|
| | | | | |
| **E** | **-** | **W** | | **30** |
| **E** | **-** | **-** | | **120** |

### Stainless steel door

| E | I | W | | (t) |
|---|---|---|---|---|
| | | | | |
| **E** | **-** | **W** | | **60** |
| **E** | **-** | **-** | | **120** |

- Radiation classification remains unchanged.
- Direct field of application remains unchanged: (As per §16 of the EN81-58:2003)
- This addendum includes all TF facade versions. (Total Façade 24 / 25 / 27)
- This addendum is concurrently used with all others addendum previously written.

Issued in GIEN, on 01 September 2009

*This document may be reproduced only under its full form.*

Otis
A United Technologies Company

**New Equipment Center**
Avenue des Montoires
45504 GIEN
France

# Fire resistance Test of Construction Elements

**According to the EN 81-58 standard: 2003**

# ADDENDUM N° 2680-46-50

**attached to the range report N° 07-A-114**

| *Reference tests N°:* | *Performed on the:* |
|---|---|
| **2677 - 44 - 50** | **16 July 2009** |
| **2635 - 44 - 50** | **02 April 2009** |

*Scope:*

## Option added: Door closing column integrating lift command and control functions

## « PRIMA TLD / TRF facade »

## E120

This addendum is valid only when accompanied with its reference range report.
It may not be added to other addenda related with this same range report, unless mentioned explicitly in the text.
This document is a translation of the "Additif N° 2680-46-50"
In case of litigation, only French version prevails.

*Requester:*

**OTIS**
**Centre Product Neff**
**Avenue des Montoires**
**F – 45504 GIEN**

**This addendum includes 11 pages. Its reproduction is authorized only in its full form.**

# 1 MODIFICATION DESCRIPTIONS

The closing column of the PRIMA TLD E120 range, initially empty (counterweight excluded) and mainly metal sheeted, will now integrate all electric and/or control commands of the lift.
The purpose of this integration of electric components, cables and metallic holders is to provide lift viewing and actuation devices from the landing.
Several cable outputs, from inside the closing column towards the sheath, are also necessary.

2 closing column options are available:

- Lift command functions. (Option 1)
- Lift command and/or control functions. (Option 2)

# 2 JUSTIFICATION OF CLASSIFICATION

Only the closing column and its upper interfaces (technical lintel) and lower interfaces (threshold crossing) are different against the PRIMA E120 range validated previously. (See 07-A-114) All other components of the door (technical lintel, opening column, panels, sill crossing, building anchors, and finish elements) remain unchanged.

Therefore, the objective is to guarantee that this new option (Closing column architecture integrating lift command and control functions) complies with the initial reference range classification requirements.

This check is based on a test programme with 2 classification tests:

- PRIMA TLD 900 x 2000 door: The configuration of the closing column is the most detrimental mechanically, i.e. in its widest version and the most exposed to fire. (Column integrating the electric components & cable outputs and OP 800 configuration column extension, the widest)
  The closing column integrates the lift command and control option. (Option 2)
  (Classification test 2677-44-50)

- PRIMA TLD 900-R x 2000 door: This reduced door configuration was tested during a previous classification. This door has an identical closing column design (Excluding the column extension) and identical cable outputs.
  This door was tested with a closing column integrating the lift's command option. (Option 1)
  (Classification test 2635-44-50)

  At the end of these 2 classification tests, all risk factors impacting fire resistance of the range are hence checked. (Door integrity and combustible mass)

*This document may be reproduced only under its full form.*

# 3 REFERENCE TESTS

| Test Nr. | Date | Free passage dimensions |
|---|---|---|
| 2677-44-50 | 16.07.2009 | 900 x 2000 mm (l x h) |
| 2635-44-50 | 02.04.2009 | 900 x 2000 mm (l x h) |

# 4 DESCRIPTIONS

## 4.1 Electric architectures

The closing column is fitted with electric functions and mechanical sub-interfaces identical to the version previously classified in the range 2614-45-50, (PRIMA TLD900-R) covering initially the 2 electric options.

All descriptions, combustible masses, cable outputs and detailed descriptions will hence not be repeated in this addendum.

## 4.2 Mechanical architectures

The PRIMA TLD E120 range is composed of 2 types of closing columns: 195 mm and 265 mm wide.

These dimensions are identical when integrating the electric functions.

See diagrams below.

OPH = Free vertical passage

*This document may be reproduced only under its full form.*

**Column configuration 195 mm**

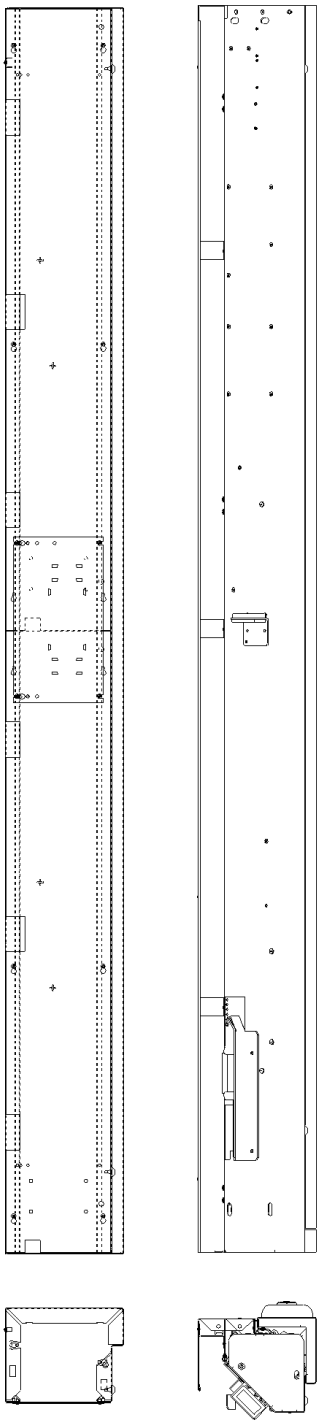

**Single metal sheet / Integrating electric functions**

**Column configuration 265 mm**

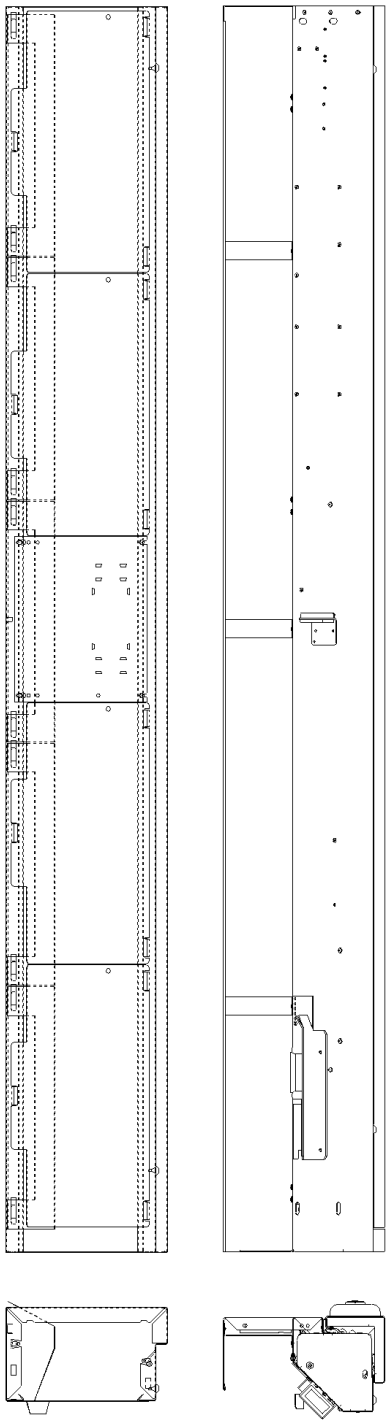

**Single metal sheet / Integrating electric functions**

*This document may be reproduced only under its full form.*

**Cross-section view. (Column configuration 265 mm)**

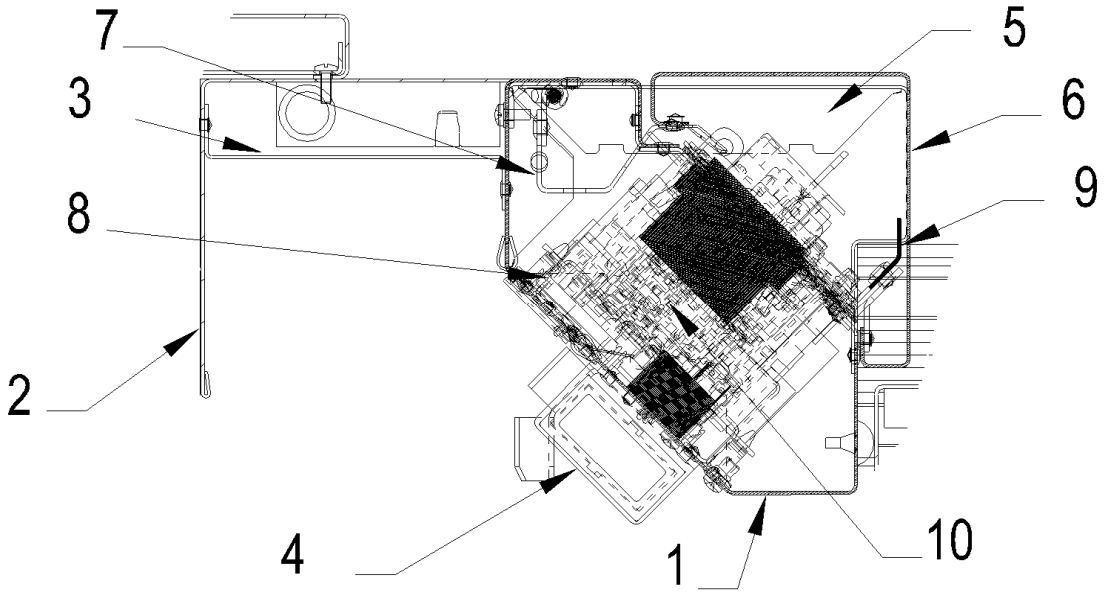


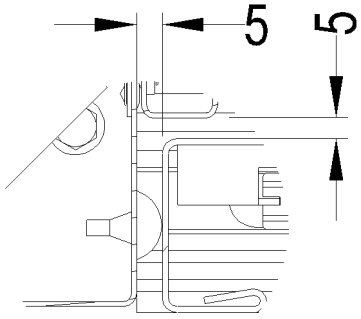


DETAIL B

**Front view. (Column configuration 265 mm)**

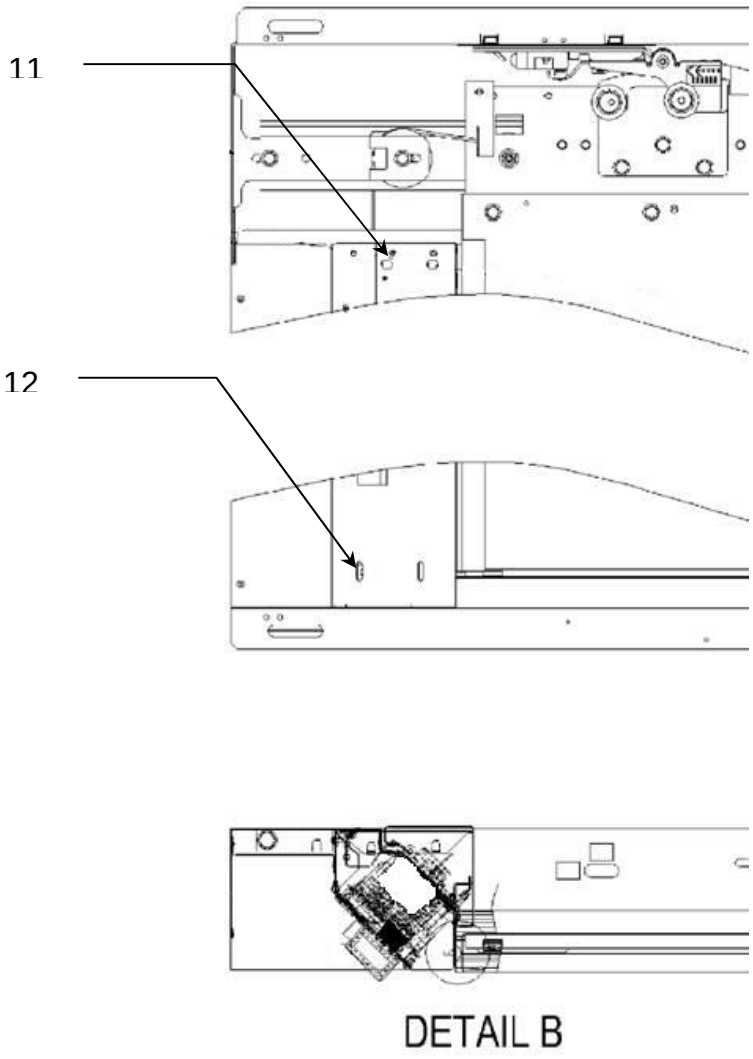


| ITEM | DESCRIPTION |
|---|---|
| **1. Rear closing column** | |
| Material | Galvanised metal sheet |
| Thickness | 1.2 mm |
| Dimension of the horizontal section | 13.8 x 23.5 x 50.5 x 70 x 117.2 x 47.8 x 60.5 x 16 mm |
| Length | OPH+34 |
| Fastening to the threshold crosspiece | 2 X HM6 |
| **2. Chassis (extension)** | |
| Material | Stainless steel / Skinplate steel / Pre-painted steel |
| Thickness | 1.2 mm |
| Dimension of the horizontal section | 218 x 164.6 x 116.2 x 23.8 x 20 mm |
| Length | OPH+34 |
| Fastening to the threshold crosspiece | 1 HM6 screw + 1 clip |

*This document may be reproduced only under its full form.*

| ITEM | DESCRIPTION |
|---|---|
| **3. Stiffener** | |
| Material | Galvanised metal sheet |
| Thickness | 1.2 mm |
| Dimension of the horizontal section | 20 x 111.5 x 20 x 30 mm |
| Fastening to the column | Rivets |
| **4. Counterweight guide** | |
| Material | Galvanised metal sheet |
| Dimensions | 33 x 45 x 2.5 mm |
| **5. Lower column plate** | |
| Material | Galvanised metal sheet |
| Thickness | 1.2 mm |
| Dimension | 145.2 x 58 x 20.5 x 48.5 x 25 mm |
| Fastening to the column | 2 Clips |
| Fastening to the threshold holder | 2 rivets |
| **6. Door** | |
| Material | Stainless steel / Skinplate steel / Pre-painted steel |
| Thickness | 1.2 mm |
| Dimension of the horizontal section | 1.5 x 18.3 x 108.6 x 96 x 18.2 x 14 mm |
| length | OPH + 5.25 mm |
| Fastening to the E&I door | 3 hinges |
| **7. Hinge** | |
| Materials | Galvanised metal sheet |
| Thickness | 1.2 |
| Dimension | 12 x 28.5 x 26 x 30.5 x 29 mm |
| Fastening to the closing column | 2 rivets |
| **8. Electric component holders** | |
| Material | Galvanised metal sheet |
| Thickness | 1.2 mm |
| Dimensions | 456.5 x 19 x 12 x 19 x 12 mm |
| Fastener | 2 rivets |
| **9. EIP lock** | |
| Materials | Galvanised metal sheet |
| Thickness | 1.5 mm |
| Dimension of the horizontal section | 15 x 48 mm |
| Length | 1,720 mm |
| E&I door fastening | Rivets |
| **10. Electric components** | See § 4.1 |
| **11. Air outlet oblong (1%)** | 2 oblongs 18 x 9 mm at 0° |
| **12. Air inlet oblong (1%)** | 2 oblongs 18 x 9 mm at 90° |

*This document may be reproduced only under its full form.*

# 5 RESULTS

## *5.1 TEST N° 2677-44-50*

### 5.1.1 Integrity

#### 5.1.1.1 Non-corrected leakage rate

Time : **ONE HUNDRED AND TWENTY ONE MINUTES. (121 min)**
Cause of the limitation **Test stopped by Requester**

#### 5.1.1.2 Corrected leak rate*

Time : **ONE HUNDRED AND TWENTY ONE MINUTES. (121 min)**
Cause of the limitation **Test stopped by Requester**
(* Up to OPH 2200 included)

#### 5.1.1.3 Sustained inflammation

Time : **ONE HUNDRED AND TWENTY ONE MINUTES. (121 min)**
Cause of the limitation **Test stopped By Requester**

### 5.1.2 Thermal insulation

Time : **NONE**
Cause of the limitation **Element not ensuring thermal insulation.**

### 5.1.3 Radiation

Time : **ONE HUNDRED AND THIRTEEN MINUTES. (113 min)**
Cause of the limitation **Thermal flow 15 kW/m² reached.**

For the description and results of this test, refer to the classification report N° 2677-44-50.

*This document may be reproduced only under its full form.*

## *5.2 TEST N° 2635-44-50*

### 5.2.1 Integrity

#### 5.2.1.1 Non-corrected leakage rate

Time : **ONE HUNDRED AND TWENTY TWO MINUTES. (122 min)**
Cause of the limitation **Test stopped by Requester**

#### 5.2.1.2 Corrected leak rate

Time : **ONE HUNDRED AND TWENTY TWO MINUTES. (122 min)**
Cause of the limitation **Test stopped by Requester**

#### 5.2.1.3 Sustained inflammation

Time : **ONE HUNDRED AND TWENTY TWO MINUTES. (122 min)**
Cause of the limitation **Test stopped by Requester**

### 5.2.2 Thermal insulation

Time : **NONE**
Cause of the limitation **Element not ensuring thermal insulation.**

### 5.2.3 Radiation

Time : **ONE HUNDRED AND THREE MINUTES. (103 min)**
Cause of the limitation **Thermal flow 15 kW/m² reached.**

For the description and results of this test, refer to the classification report N° 2635-44-50.

*This document may be reproduced only under its full form.*

# 6 CONCLUSIONS / RESTRICTIONS

At the end of the different classification tests performed to cover any variability in this range, the following comments were issued:

- The classification criteria remain unchanged:

### Pre-painted steel or « Skinplate » doors

| E | I | W | | (t) |
|---|---|---|---|---|
| | | | | |
| **E** | **-** | **W** | | **30** |
| **E** | **-** | **-** | | **120** |

### Stainless steel doors

| E | I | W | | (t) |
|---|---|---|---|---|
| | | | | |
| **E** | **-** | **W** | | **60** |
| **E** | **-** | **-** | | **120** |

The closing column option integrating the lift command and/or control functions does not modify the radiation and integrity criteria of the door range tested initially.

- The range options remain unchanged:

Variants in terms of finish, fitting and junctions with the building, call buttons, remain unchanged in respect of the reference range (+ related addenda).

- Facade configurations:

The 2 reference tests allowed to validate that the door's integrity was unchanged. Therefore, the classifications are also unchanged for door configurations in TF facades.

*This document may be reproduced only under its full form.*

- Smoke evacuation:

The 2 reference tests have validated that an air inlet in the lower part (1% of the small column's cross-section) as well as an air outlet in the upper part (1% of the small column's cross-section) improve smoke evacuation from the combustible mass issued from inside the small column.

- The dimensional variations are modified:

The dimensional extension rules, as defined in §16 of EN81-58:2003 allow a maximum 15% extension of the free passage height of the door tested. However, due to smoke phenomena occurring at the start of test, this extension is limited to a free passage height ≤ 2200 mm, against 2415 mm in its version with steel plated closing column.

| | Free passage dimensions | |
|---|---|---|
| | Minimum | Maximum |
| Width (mm) OP | **630** | **1170** |
| Height (mm) OPH | **< 2200** | **2200** |

- This addendum may be added to the addenda issued previously.

Issued in GIEN, on 01.09.2009

*This document may be reproduced only under its full form.*

**New Equipment Center**
Avenue des Montoires
45504 GIEN Cedex
France

# Fire resistance Test of Building Elements

**According the EN 81-58 standard: 2003**

# ADDENDUM n° 2732-46-50

**attached to the range report N° 07-A-114**

| *Reference tests n° :* | *Performed on the :* |
|---|---|
| **2677 - 44 - 50** | **16 July 2009** |
| **2635 - 44 - 50** | **02 April 2009** |
| **2703 - 44 - 50** | **14 October 2009** |
| **2723 - 38 - 50** | **22 December 2009** |

*Scope :*

## Expert judgment : Range extension – Opening Passage Height Validation up to 2 300 mm (OPH)

## « PRIMA TLD / Door closing column integrating lift command and control functions »
## E 120

This addendum is valid only when accompanied with its reference range report.
It may not be added to other addendum related with this same range report, unless mentioned explicitly in the text.
This document is a translation of the “Additif N° 2732-46-50”
In case of litigation, only French version prevails.

*Requester :*
**OTIS**
**New Equipment center**
**Avenue des Montoires**
**F – 45504 GIEN Cedex**

**This addendum report includes 6 pages. Its reproduction is authorized only in its full form.**

## 1 MODIFICATION DESCRIPTIONS

PRIMA TLD E120 landing door range has following configurations :

- Maximum Opening Passage Height of 2 415 mm (See range report N° 07-A-114) when standard closing column is used. (Only metallic parts)
- Maximum Opening Passage Height of 2 200 mm (See range report N° 2680-46-50) when lift command and control functions are integrated in the closing column.

The purpose of this request is to consider extension of the PRIMA door range TLD, up to Opening Passage Height of 2 300 mm for E120 configuration previously non-authorized when lift command and control functions are included in the closing column.

## 2 CLASSIFICATION JUSTIFICATION

The classification test of the PRIMA TLD / TRF when lift command and control functions are included in the closing column, (See classification report N° 2677-44-50) has been performed with a door Opening Passage Height = 2 000 mm.

E120 classification has been obtained and direct field of application rules, defined in §16 of the EN81-58:2003 were applied. (Leakage rate correction allowed an opening passage height extension up to 15%)

After theoretical calculation, this correction factor has authorized an Opening Passage Height ≤ 2 260 mm, for 2 300 mm maximum. (+15%)

The extrapolated leakage rate, for an Opening Passage Height ≤ 2 300 mm was not correct only during the 6 first minutes of test (Between 14 to 20 min) and was correct beyond 20 min up to the end of test.

During this classification, because it was first tests with a door configuration equipped of lift command and control functions integrated to the closing column, we preferred to follow strictly rules of direct field of application described in EN81-58:2003. Then, an Opening Passage Height restriction at 2 200 mm has been acted. (2 260 mm accepted by calculation)
(Addendum N° 2680-46-50 has a restriction of Opening Passage Height ≤ 2 200 mm)

Up to now, based on a test campaign focused on similar configurations, (12 tests) we can affirm following status :

- The global measured leakage rate is composed of door components behaviour + smoke evacuation, due to electrical components using.
- The global measured leakage rate will be more critical at the beginning of test due to smoke evacuation and also eventually more critical at the end of test, linked to door components integrity losses.
- Smoke evacuation quantity is dependant of combustible weight using in door structure, but not dependant of Opening Passage Height variabilities.
- The global measured leakage rate, at constant door integrity, has a decreased tendency when the combustible weight will be consumed.

*This document may be reproduced only under its full form.*

- Tests performed later have showed a conform extrapolated leakage rate.

- An experimental test for smoke analysis aspects has been performed in the worse case (In term of combustible weight) and showed a conform extrapolated leakage rate.

Based on tests data coming from significant door configurations (Lift command and control functions integrating to the closing column) we can affirm that an Opening Passage Height ≤ 2 300 mm (As per direct field of application of EN81-58:2003) could be authorized (40 mm increased compared to the initial addendum N° 2680-46-50) when lift command and control functions are integrating to the closing column.

## 3 REFERENCE TEST

| Test N° | Date | Free passage dimensions |
|---|---|---|
| 2677-44-50 | 16 July 2009 | 900 x 2000 mm (l x h) |
| 2635-44-50 | 02 April 2009 | 900 x 2000 mm (l x h) |
| 2703-44-50 | 14 October 2009 | 900 x 2000 mm (l x h) |
| 2723-38-50 | 22 December 2009 | 900 x 2100 mm (l x h) |

## 4 DESCRIPTIONS

Doors descriptions are unchanged compared to previous products described in referenced range reports, 07-A-114 (TLD) and addendum 2680-46-50.

*This document may be reproduced only under its full form.*

# 5 RESULTS

## *5.1 Test N°2677-44-50*

**Leakage rate / Opening Passage Height = 2 000 mm.**

Time : **ONE HUNDRED AND TWENTY ONE MINUTES. (121 min)**
Cause of the limitation **Test stopped by the requester**

**Extrapolated leakage rate:**

Maximum allowed (15%) : Opening Passage Height **= 2 300 mm**
Calculated extension : Opening Passage Height **= 2 260 mm**

Authorized extension : Opening Passage Height **= 2 200 mm**

For the description and results of this test, refer to the classification report N° 2677-44-50.

## *5.2 Test N°2635-44-50*

**Leakage rate / Opening Passage Height = 2 000 mm.**

Time : **ONE HUNDRED AND TWENTY TWO MINUTES. (122 min)**
Cause of the limitation **Test stopped by the requester**

**Extrapolated leakage rate:**

Maximum allowed (15%) : Opening Passage Height **= 2 300 mm**
Calculated extension : Opening Passage Height **= 2 500 mm**

Authorized extension : Opening Passage Height **= 2 300 mm**

For the description and results of this test, refer to the classification report N° 2635-44-50.

*This document may be reproduced only under its full form.*

### *5.3 Test N°2703-44-50*

**Leakage rate / Opening Passage Height = 2 000 mm.**

Time : **ONE HUNDRED AND TWENTY ONE MINUTES. (121 min)**
Cause of the limitation **Test stopped by the requester**

**Extrapolated leakage rate:**

Maximum allowed (15%) : Opening Passage Height **= 2 300 mm**
Calculated extension : Opening Passage Height **= 2 815 mm**

Authorized extension : Opening Passage Height **= 2 300 mm**

For the description and results of this test, refer to the classification report N° 2703-44-50.

### *5.4 Test N°2723-38-50*

**Leakage rate / Opening Passage Height = 2 000 mm.**

Time : **NINETY MINUTES. (90 min)**
Cause of the limitation **Experimental test for smoke analysis aspect.**

**Extrapolated leakage rate:**

Maximum allowed (15%) : Opening Passage Height **= 2 415 mm**
Calculated extension : Opening Passage Height **= 2 415 mm**

Authorized extension : Opening Passage Height **= 2 415 mm**

For the description and results of this test, refer to the evaluation report N° 2723-38-50.

*This document may be reproduced only under its full form.*

## 6 CONCLUSIONS / RESTRICTIONS

Based on previous classification tests performed and observations described in the §2 of this report, following opinions have been done:

- Classifications criteria remain unchanged :

### Pre-painted steel or « Skinplate » doors

| E | I | W | | (t) |
|---|---|---|---|---|
| | | | | |
| **E** | **-** | **W** | | **30** |
| **E** | **-** | **-** | | **120** |

### Stainless steel doors

| E | I | W | | (t) |
|---|---|---|---|---|
| | | | | |
| **E** | **-** | **W** | | **60** |
| **E** | **-** | **-** | | **120** |

- Direct field of application are changed :

| | Clear Opening Passage | |
|---|---|---|
| | Minimum | Maximum |
| width (mm) OP | **630** | **1170** |
| Height (mm) OPH | ≤ **2300** | **2300** |

- This addendum is concurrently used with the addendum N° 2680-46-50 previously written.

Issued in GIEN, on 16 February 2010

*This document may be reproduced only under its full form.*

**New Equipment Center**
Avenue des Montoires
45504 GIEN
France

# Fire resistance Test of Building Elements

**According to the EN 81-58 standard: 2003**

# ADDENDUM n° 2762-46-50

## attached to range reports N° 07-A-59 / 07-A-60 / 07-A-80 / 07-A-81 / 07-A-113 / 07-A-114 & 2614-45-50

| *Reference tests N°:* | *Performed on the:* |
|---|---|
| **2755 - 44 - 50** | **26 April 2010** |

*Scope:*

## <u>Option added:</u> Call button & Landing vertical display

## «S-LINE2 Aesthetic »

## E120

This addendum is valid only when accompanied with its reference range report.
It may not be added to other addendum related with this same range report, unless mentioned explicitly in the text.
This document is a translation of the “Additif N° 2762-46-50”
In case of litigation, only French version prevails.

*Requester:*

**OTIS**
**New Equipment Center**
**Avenue des Montoires**
**F – 45504 GIEN**

**This addendum report includes 6 pages. Its reproduction is authorized only in its full form.**

# 1 MODIFICATION DESCRIPTIONS

The objective is to validate 2 new options of interfaces users present on the landing door, namely:

- Using of metallic plastron (Aesthetic aspect) integrated between landing door call buttons and visible column side. (1 or 2 buttons) Option only available when call buttons are directly integrated to the landing door column. (HBB)
- Landing display (Up & down direction) equipped of 2 arrows. (SHL)

All of these two options are equipped of their mechanical & electrical equipments:

- Sheet metal protection part.
- Lift interface electronic board
- Wiring.

# 2 JUSTIFICATION OF CLASSIFICATION

This validation is based on a test program comprising 1 test of classification:

PRIMA-S door / MRF 150 / TLD 900 x 2000 : Door configuration tested is a PRIMA-S version, MRF 150 facia, stainless steel finish, TLD 900 x 2000, with a closing column equipped of all necessary new options equipments. (HBB & SHL)

PRIMA-S door configuration was used as an optimized basis test for the installation and fire evaluation of these new options. Indeed, this one is known to have a stable leakage rate over one period >120min. This stability allowing us to observe the impact on the leakage rate of the cuttings carried out in the column of door, necessary to the integration of these new options

Fire resistance behaviour, during classification test, with doorset equipped of rear opened column (Hoistway side) confirms the validation of these options when they are integrated in the door of access to the electrical commands and / or lift control which can be integrated in the closing column of landing doors. Indeed, the options being completely integrated in a closed column, the impact is all the more negligible.

With resulting from this classification test, the whole of the risk factors impacting the fire resistance thus has checked and validated:

- No flame detected during a period > 120 min.
- Metallic protection installed on the rear position of the new landing display has a correct obstruction function. Then, no impact on the door leakage rate.
- The successive tests of obstruction carried out during the test clearly show no impact on the leakage rate related to the 2 diameters, 28mm, used for the fixing of call buttons.

*This document may be reproduced only under its full form.*

# 3 REFERENCE TEST

| Test Nr. | Date | Free passage dimensions |
|---|---|---|
| 2755-44-50 | 26 April 2010 | 900 x 2000 mm (l x h) |

# 4 DESCRIPTIONS

## 4.1 Buttons option. (HBB)

The option consists in integrating a plastron, (Plate having an only aesthetic function) stainless steel thickness 2 mm (Item 1), visible from the landing side, fixed by the button visible flange (Item 2) previously directly integrated on the door column. (Item 3) A welded screw (M5) could be used, for others functions. (Anti rotation when only one call button used, earthing connexion, etc...)

Landing side:

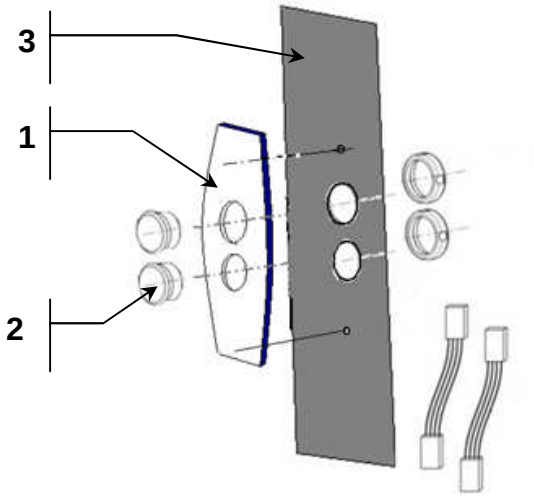


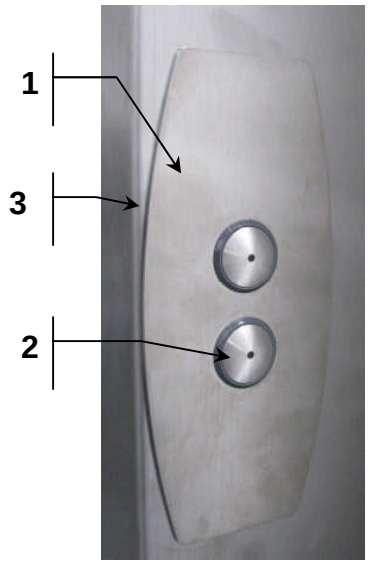


Hoistway side:

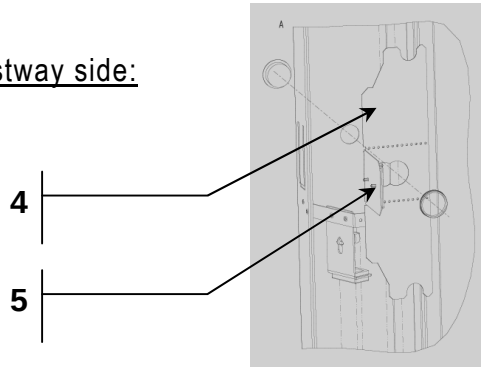


A metallic cover, (Item 4) folding after mounting, has a component falling protection function and also buttons interface board support. (Item 5)

Buttons position on door column is unchanged.

*This document may be reproduced only under its full form.*

### 4.2 Landing display. (SHL)

The option consists in fixing a stainless steel plate thickness 2 mm (Item 1) on the visible face of the landing door, integrating the 2 arrows of the display. (Item 2) This option requires a cutting in the column of door, as well as a fixing by 2 welded pins. (M5) A metallic cover (Item 3) is used for display protection and also to prevent leakage effect during fire test, due to important column cut-out. (Fixing by the 2 welded pins M5)

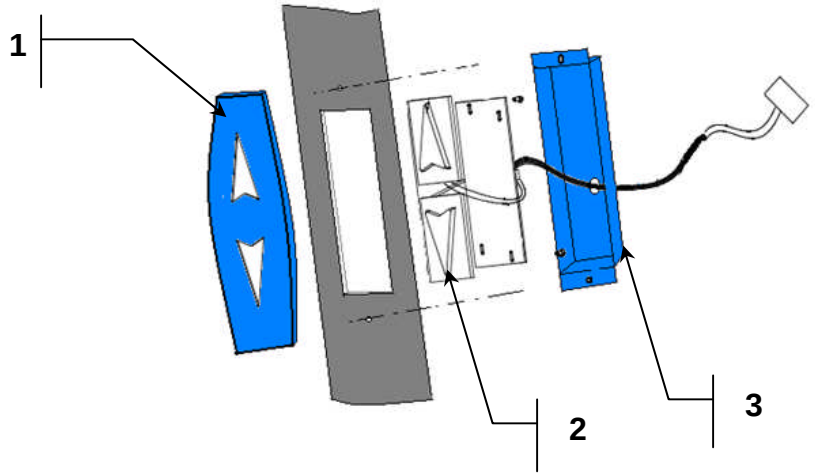


A door column cut-out 65x145 is necessary for the landing display PCB integration.
Column display position is unchanged.

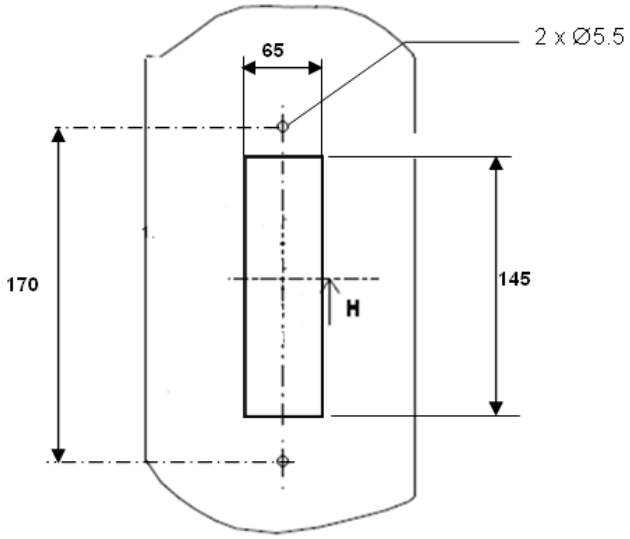


*This document may be reproduced only under its full form.*

# 5 RESULTS

## *5.1 Test N°2755-44-50*

### 5.1.1 Integrity

#### 5.1.1.1 Measured leakage rate. (Opening Passage Height = 2000 mm)

Time : **ONE HUNDRED AND TWENTY TWO MINUTES. (122 min)**
Cause of the limitation **Test stopped by Requester**

#### 5.1.1.2 Extended leakage rate.

Maximum authorized (15%) : **Vertical's clear opening dimension (OPH) = 2 300 mm**

After correction factor defined in §16 of EN81-58:2003 / Direct field of application:

Time : **CENT VINGT DEUX MINUTES. (122 min)**
Cause of the limitation **Test stopped by Requester**

#### 5.1.1.3 Sustained inflammation

Time : **ONE HUNDRED AND TWENTY TWO MINUTES. (122 min)**
Cause of the limitation **Test stopped by Requester**

### 5.1.2 Thermal insulation

Time : **NONE**
Cause of the limitation **Element not ensuring thermal insulation.**

### 5.1.3 Radiation

Time : **NO MEASURED**
Cause de la limitation

For the description and results of this test, refer to the classification report N° 2755-44-50.

*This document may be reproduced only under its full form.*

## 6 CONCLUSIONS / RESTRICTIONS

Based on this classification test performed to evaluate these new options fire resistance, the following comments were issued:

- Using of metallic plastron (Aesthetic aspect) integrated between landing door call buttons and visible column side. (1 or 2 buttons) Option only available when call buttons are directly integrated to the landing door column. (HBB)
- Landing display (Up & down direction) equipped of 2 arrows. (SHL)

When a landing door is equipped of these new options (independently or both) fire resistance criteria remain unchanged.

- This addendum could be added to all addendums previously written.
- This addendum objects are valid with all existing landing door variability.(Mounting / finish / TF versions and others options)
- This addendum is also valid for landing door ranges which include electrical commands and/or lift control integrated to the closing landing door column. (See range report mentioned in reference)

Issued in GIEN, on 04 May 2010

*This document may be reproduced only under its full form.*