1

3x 3x 3x

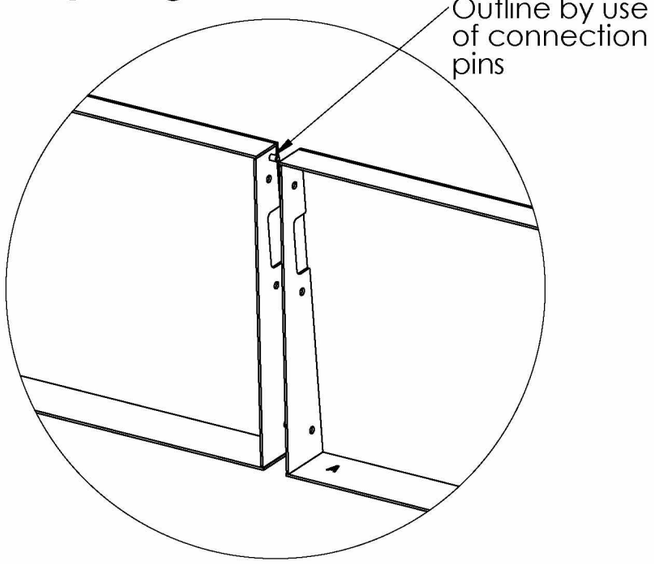

2

1x

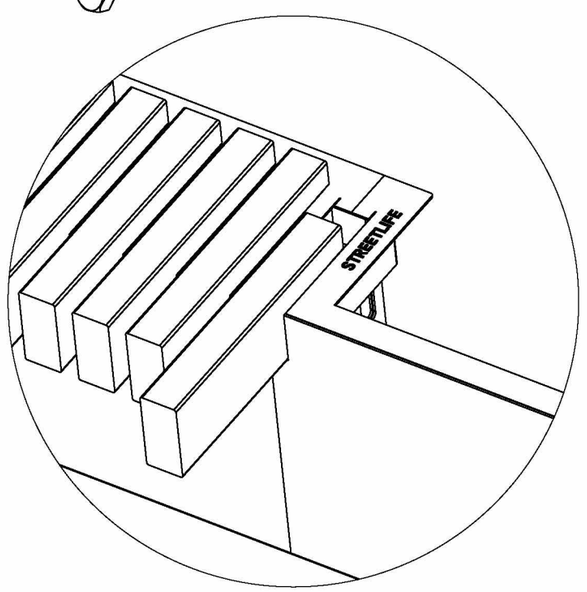

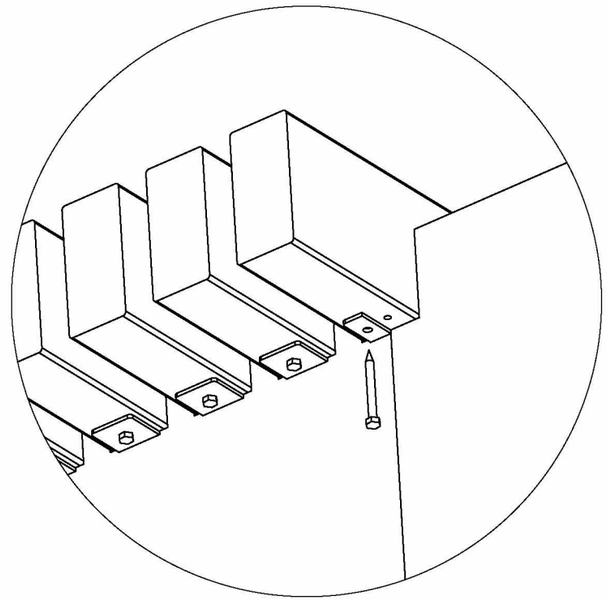

3

3x 3x 3x

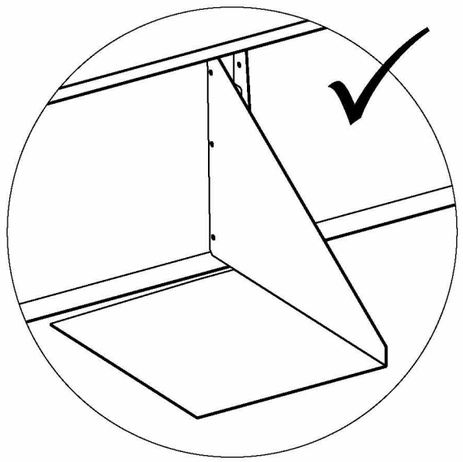

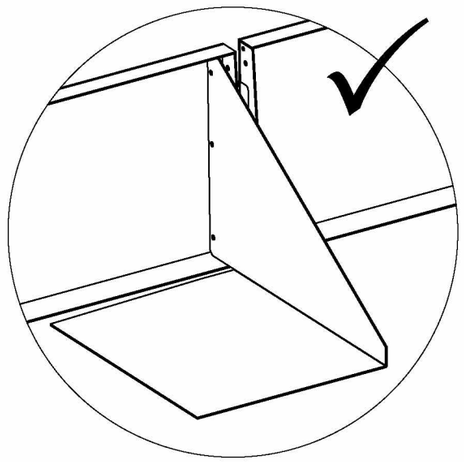

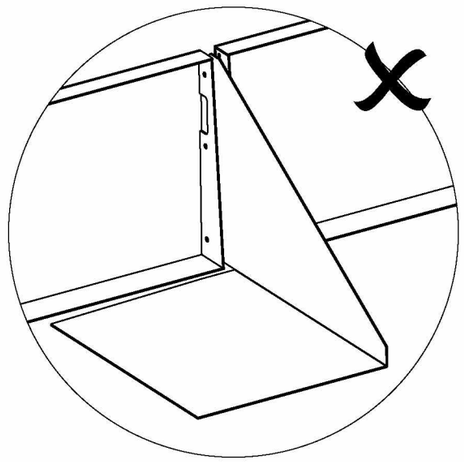

DESIGN:
Streetlife, protected by int. Modeldepots & Patents

purpose: **Product specifications**

material:

am. proj.

scale: 1:50

drawn by:

units: mm

checked by: -

date: 4-11-2015

client:

STREETLIFE®

Oude Singel 144
2312 RG Leiden
The Netherlands

T +31 (0) 715246846
F +31 (0) 715246849
www.streetlife.nl

project name:

Item no: Rev.0

Item name: A3