20220617_DIANA_drs225602_Brug2484_Charac_NONLIN_Input

Table of Contents

Input: 20220617_DIANA_drs225602_Brug2484_Charac_NONLIN 2
Units 2
Directions 2
Material: C55_SLS 2
Material: C55_ULS 3
Material: LinearSteel 3
Material: PrestressInterface 4
Material: reinfo_SLS 4
Material: reinfo_SLS_Cable 5
Material: reinfo_ULS 5
Material: reinfo_bondslip_SLS 6
Material: reinfo_bondslip_ULS 7
Geometry: 12mmDia 7
Geometry: 20mmDia 7
Geometry: Bar25_Bondslip 8
Geometry: Bar32_Bondslip 8
Geometry: Bgls16_Bondslip 8
Geometry: Bgls20_Bondslip 8
Geometry: Bgls25_Bondslip 8
Geometry: Cable 9
Geometry: DeckReinfo 9
Geometry: ExtraReinfo 9
Geometry: PrestressCable 9
Geometry: TopReinfo 9
Geometry: 20220617_DIANA_drs225602_Brug2484_Charac_NONLIN 10
Boundary conditions, mesh and loads: 20220617_DIANA_drs225602_Brug2484_Charac_NONLIN 11

Input: 20220617_DIANA_drs225602_Brug2484_Charac_NONLIN

Units

The following units are applied

Quantity	Unit	Symbol
Length	millimeter	mm
Mass	ton	T
Force	newton	N
Time	second	s
Temperature	kelvin	K
Angle	degree	°

Directions

The following directions are defined:

Name	X	Y	Z
X	1	0	0
Y	0	1	0
Z	0	0	1
inclineAlongX	0.999555	0	-0.0298201
Quadload BeamLoad 2	-1	0	0

Material: C55_SLS

Name	Value
Material class	Concrete and masonry
Material model	Total strain based crack model
Color	grey
Young's modulus	37951.2 N/mm2
Poisson's ratio	0.2
Mass density	2.5e-09 T/mm3
Crack orientation	Rotating
Tensile curve	Hordijk
Tensile strength	1.88963 N/mm2
Mode-I tensile fracture energy	0.10512 N/mm
Crack bandwidth specification	Govindjee
Residual tensile strength	0 N/mm2

Reduction model	Damage based
Compression curve	Parabolic
Compressive strength	55 N/mm2
Compressive fracture energy	30.7852 N/mm
Residual compressive strength	0 N/mm2
Reduction model	Vecchio and Collins 1993
Lower bound reduction curve	0.4
Confinement model	Selby and Vecchio

Material: C55_ULS

Name	Value
Material class	Concrete and masonry
Material model	Total strain based crack model
Color	grey
Young's modulus	31626 N/mm2
Poisson's ratio	0.2
Mass density	2.5e-09 T/mm3
Crack orientation	Rotating
Tensile curve	Hordijk
Tensile strength	1.88963 N/mm2
Mode-I tensile fracture energy	0.0700801 N/mm
Crack bandwidth specification	Govindjee
Residual tensile strength	0 N/mm2
Reduction model	Damage based
Compression curve	Parabolic
Compressive strength	36.6667 N/mm2
Compressive fracture energy	20.5235 N/mm
Residual compressive strength	0 N/mm2
Reduction model	Vecchio and Collins 1993
Lower bound reduction curve	0.4
Confinement model	Selby and Vecchio

Material: LinearSteel

Name	Value
Material class	Steel
Material model	Linear elastic isotropic
Color	steelblue

Young's modulus	210000 N/mm2
Poisson's ratio	0.3
Mass density	7.85e-09 T/mm3

Material: PrestressInterface

Name	Value
Material class	Interface elements
Material model	Linear elasticity
Color	silver
Type	3D surface interface
Normal stiffness modulus-z	160000 N/mm3
Shear stiffness modulus-x	80000 N/mm3
Shear stiffness modulus-y	80000 N/mm3

Material: reinfo_SLS

Name	Value
Material class	Reinforcements
Material model	Von Mises plasticity
Color	slateblue
Young's modulus	200000 N/mm2
Yield	VMISES
Plastic hardening	Plastic strain-yield stress
Strain-Stress diagram	0 500 0.024 525 0.025 0 0.1 0 N/mm2
Hardening hypothesis	Strain hardening
Hardening type	Isotropic hardening

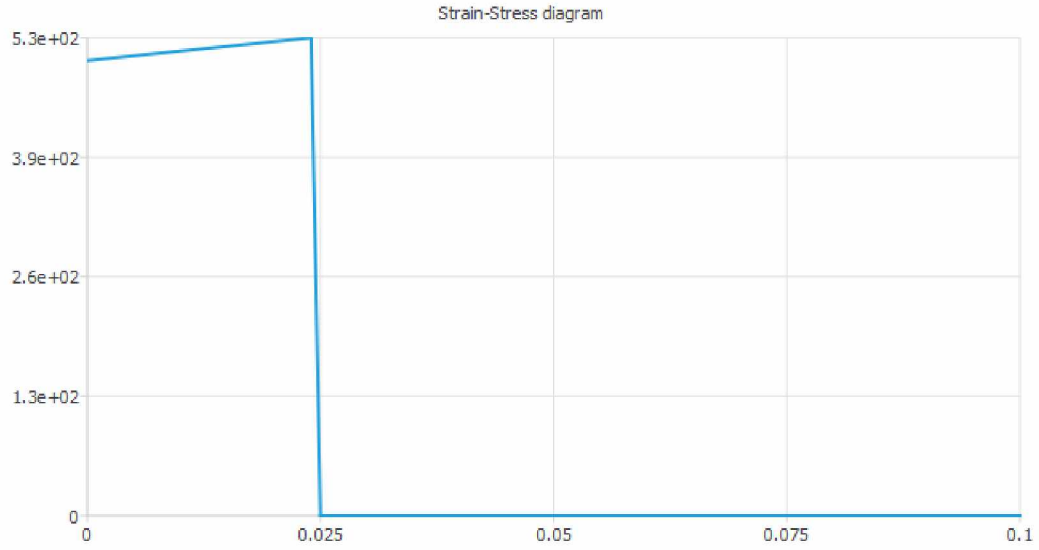

Material: reinfo_SLS_Cable

Name	Value
Material class	Reinforcements
Material model	Von Mises plasticity
Color	slateblue
Aspect	Bonding
Young's modulus	200000 N/mm2
Yield	VMISES
Plastic hardening	No hardening
Yield stress	1500 N/mm2
Reinforcement is not bonded to mother element	True

Material: reinfo_ULS

Name	Value
Material class	Reinforcements
Material model	Von Mises plasticity
Color	slateblue
Young's modulus	200000 N/mm2
Yield	VMISES
Plastic hardening	Plastic strain-yield stress
Strain-Stress diagram	0 434.783 0.024 456.522 0.025 0 0.1 0 N/mm2
Hardening hypothesis	Strain hardening

Hardening type	Isotropic hardening

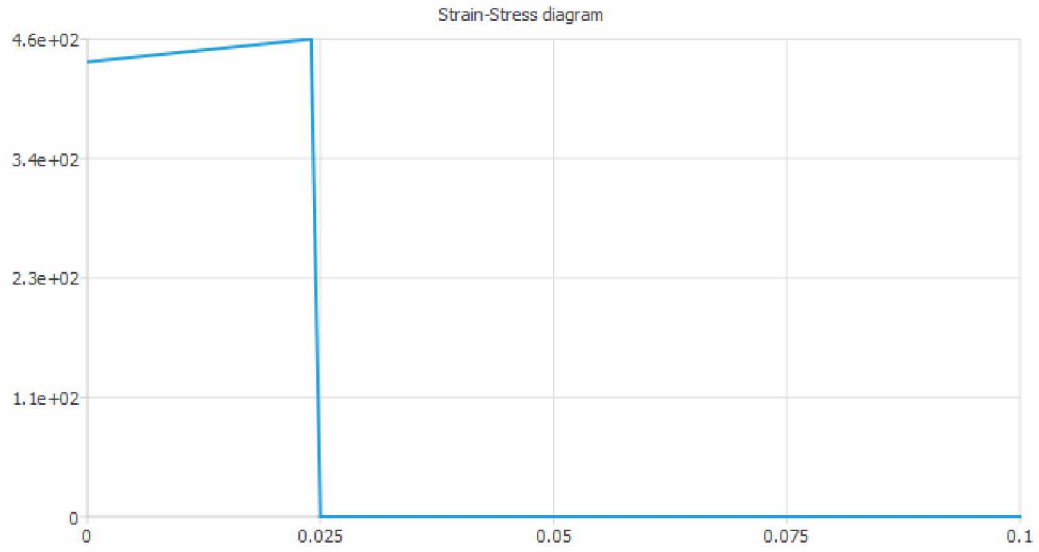

Material: reinfo_bondslip_SLS

Name	Value
Material class	Reinforcements
Material model	Bond-slip reinforcement
Color	slateblue
Young's modulus	200000 N/mm2
Poisson's ratio	0.3
Mass density	7.85e-09 T/mm3
Nonlinear model	Von Mises plasticity
Yield	VMISES
Hardening function	Plastic strain-yield stress
Hardening hypothesis	Strain hardening
Plastic strain-yield stress	0 500 0.024 525 0.025 0 0.1 0 N/mm2
Hardening type	Isotropic hardening
Normal stiffness modulus	63252.1 N/mm3
Shear stiffness modulus	6325.21 N/mm3
Bond-slip interface failure model	CEB-FIB 2010 bond-slip function
Bondsl	6
Slip parameters	8.52518 0.1 0.00014656 0.143369 0.143369 0.172043 0.4 N/mm2
Reset state parameters on	False

material change

Material: reinfo_bondslip_ULS

Name	Value
Material class	Reinforcements
Material model	Bond-slip reinforcement
Color	slateblue
Young's modulus	200000 N/mm2
Poisson's ratio	0.3
Mass density	7.85e-09 T/mm3
Nonlinear model	Von Mises plasticity
Yield	VMISES
Hardening function	Plastic strain-yield stress
Hardening hypothesis	Strain hardening
Plastic strain-yield stress	0 434.783 0.024 456.522 0.025 0 0.1 0 N/mm2
Hardening type	Isotropic hardening
Normal stiffness modulus	63252.1 N/mm3
Shear stiffness modulus	6325.21 N/mm3
Bond-slip interface failure model	CEB-FIB 2010 bond-slip function
Bondsl	6
Slip parameters	8.52518 0.1 0.00014656 0.143369 0.143369 0.172043 0.4 N/mm2
Reset state parameters on material change	False

Geometry: 12mmDia

Name	Value
Geometry class	Reinforcement lines
Geometry model	Bar reinforcements
Reinforcement type	Circular beam bond-slip
Diameter of circle	12 mm

Geometry: 20mmDia

Name	Value
Geometry class	Reinforcement lines

Geometry model	Bar reinforcements
Reinforcement type	Circular beam bond-slip
Diameter of circle	20 mm

Geometry: Bar25_Bondslip

Name	Value
Geometry class	Reinforcement lines
Geometry model	Bar reinforcements
Reinforcement type	Circular beam bond-slip
Diameter of circle	25 mm

Geometry: Bar32_Bondslip

Name	Value
Geometry class	Reinforcement lines
Geometry model	Bar reinforcements
Reinforcement type	Circular beam bond-slip
Diameter of circle	32 mm

Geometry: Bgls16_Bondslip

Name	Value
Geometry class	Reinforcement lines
Geometry model	Bar reinforcements
Reinforcement type	Circular beam bond-slip
Diameter of circle	16 mm

Geometry: Bgls20_Bondslip

Name	Value
Geometry class	Reinforcement lines
Geometry model	Bar reinforcements
Reinforcement type	Circular beam bond-slip
Diameter of circle	20 mm

Geometry: Bgls25_Bondslip

Name	Value
Geometry class	Reinforcement lines
Geometry model	Bar reinforcements
Reinforcement type	Circular beam bond-slip
Diameter of circle	25 mm

Geometry: Cable

Name	Value
Geometry class	Reinforcement lines
Geometry model	Bar reinforcements
Reinforcement type	Embedded
Cross-section input	Cross-section
Cross-section area of bar	3300 mm2

Geometry: DeckReinfo

Name	Value
Geometry class	Reinforcement sheets
Geometry model	Grid reinforcements
Thickness	Diameter and spacing
Bar diameter	20 25 mm
Spacing between bars	100 100 mm
Reinforcement x axis	1 0 0
Reinforcement grid considered in design	False

Geometry: ExtraReinfo

Name	Value
Geometry class	Reinforcement sheets
Geometry model	Grid reinforcements
Thickness	Diameter and spacing
Bar diameter	25 25 mm
Spacing between bars	200 200 mm
Reinforcement grid considered in design	False

Geometry: PrestressCable

Name	Value
Geometry class	Reinforcement lines
Geometry model	Bar reinforcements
Reinforcement type	Embedded
Cross-section input	Diameter
Diameter of bar	64 mm

Geometry: TopReinfo

Name	Value

Geometry class	Reinforcement sheets
Geometry model	Grid reinforcements
Thickness	Diameter and spacing
Bar diameter	56 20 mm
Spacing between bars	140 200 mm
Reinforcement x axis	1 0 0
Reinforcement grid considered in design	False

Geometry: 20220617_DIANA_drs225602_Brug2484_Charac_NONLIN

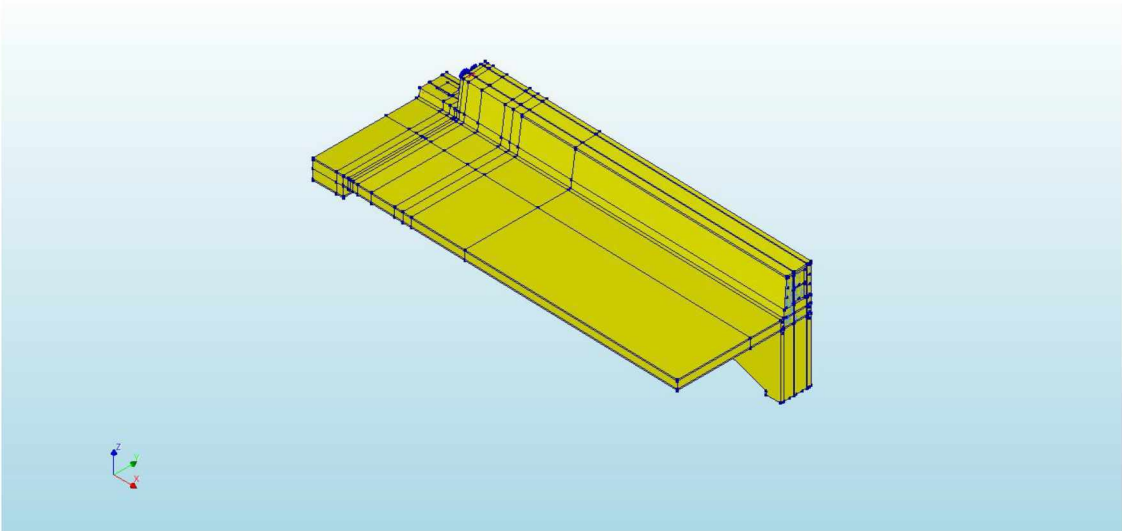

TOP view

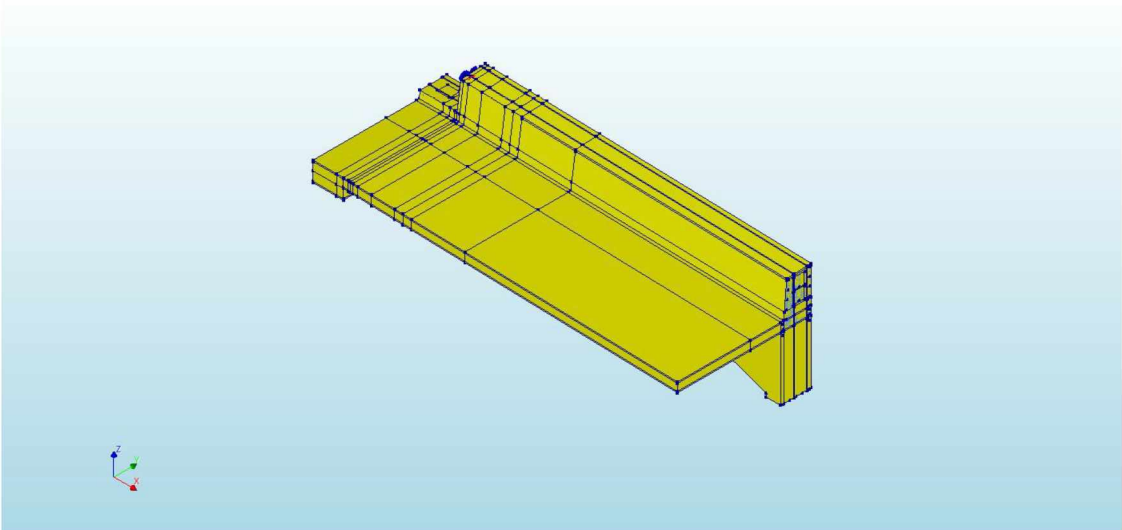

ISO view

Boundary conditions, mesh and loads: 20220617_DIANA_drs225602_Brug2484_Charac_NONLIN

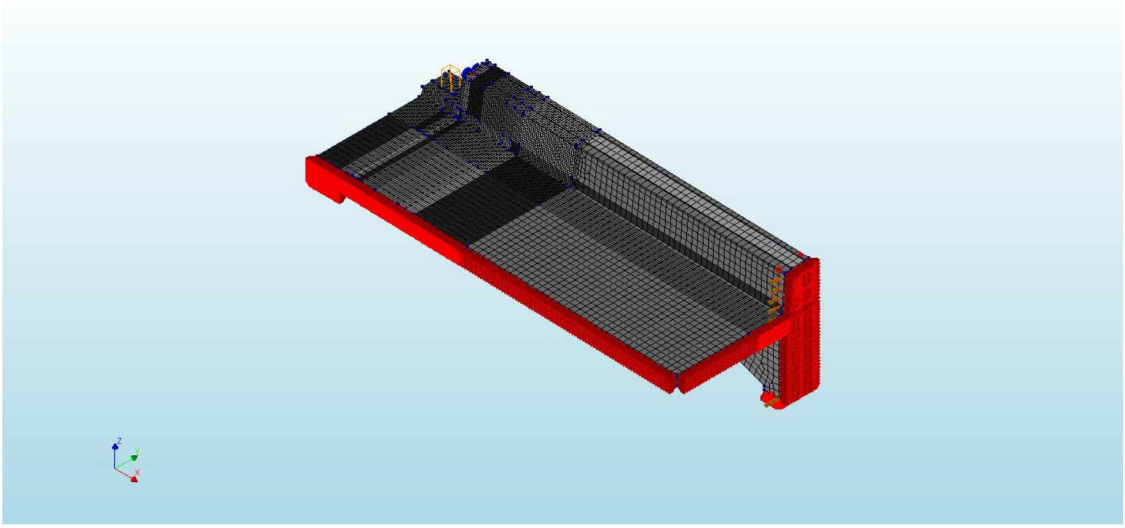

BeamLoad

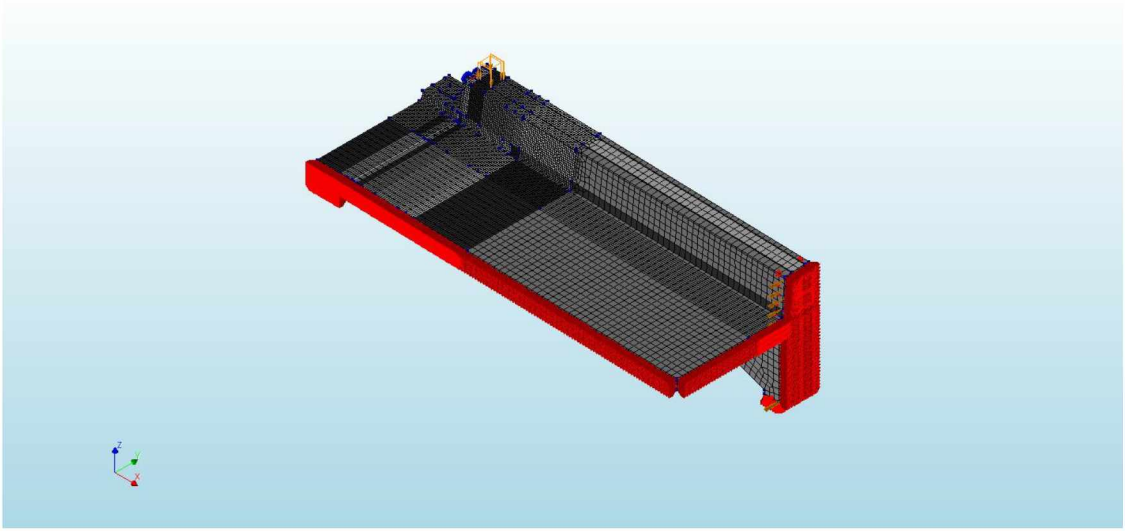

ClampingLoad

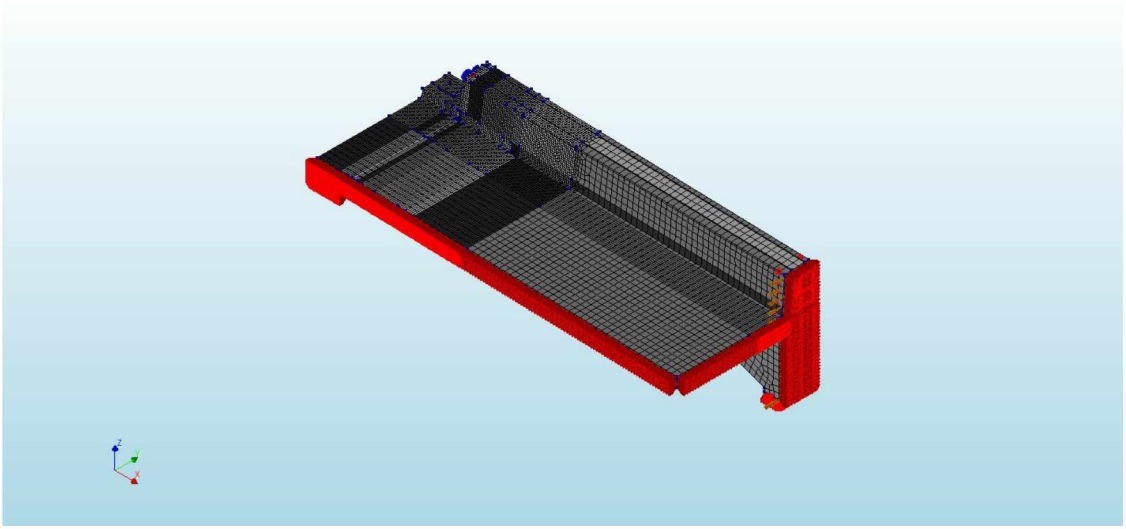

Prestress_Lateral

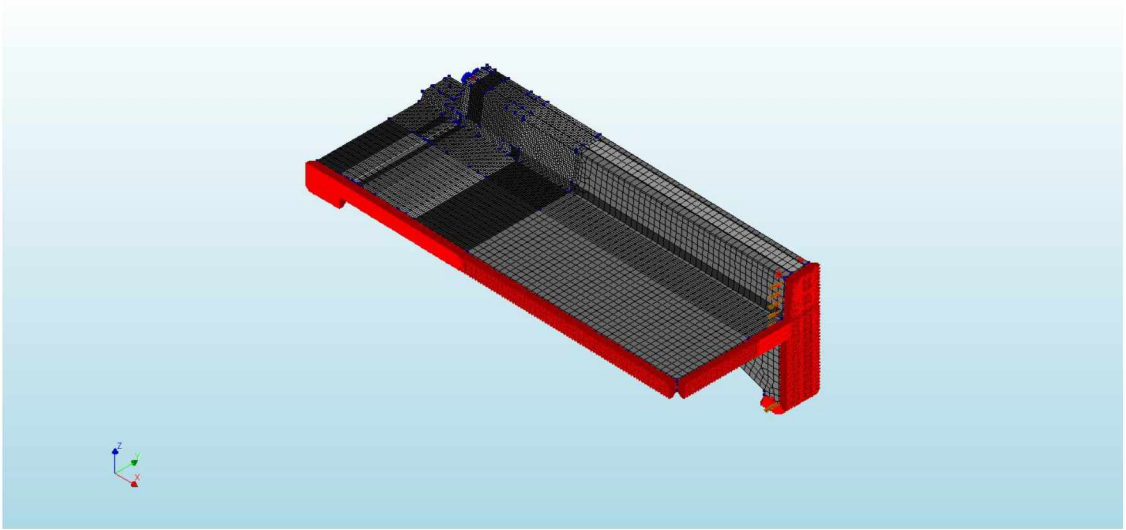

Prestress_Longitudinal

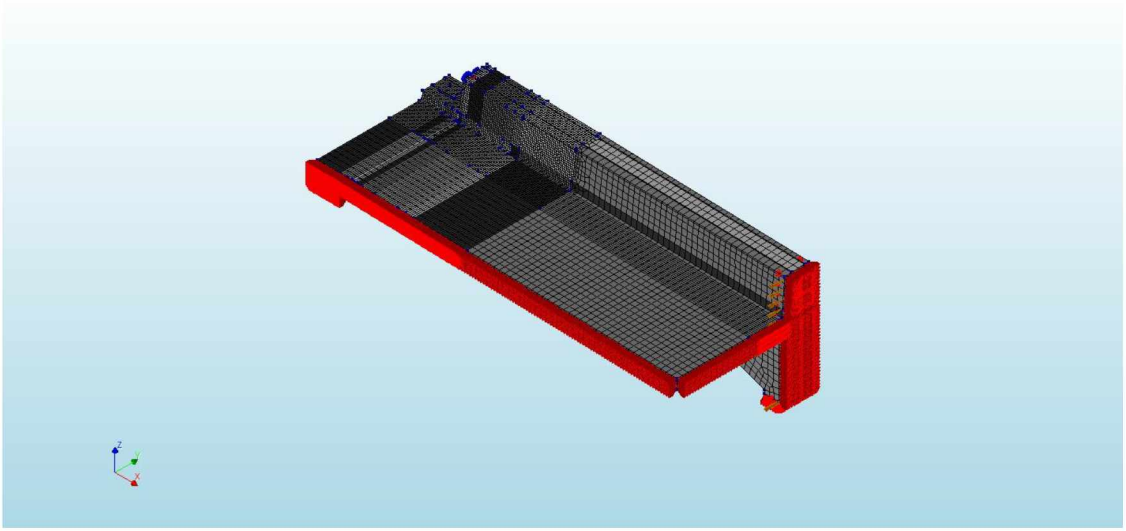

SW