PAGENR:	DOCUMENTNR:	DOCUMENTTITLE:	REV:	DATE:	DETAILS:
1	0000-1	Index	0	24-02-25	
2	0010-1	Front view (existing)	0	24-02-25	
3	0050-1	Top view (existing)	0	24-02-25	
4	0060-1	Land Registry Situation	0	24-02-25	
5	0061-1	Contract drawing	0	24-02-25	
6	0100-1	Technical front view	0	24-02-25	
7	0110-1	Technical top view	0	24-02-25	
8	0120-1	Front view equipment (room)	0	24-02-25	
9	0120-2	Front view equipment (room)	0	24-02-25	
10	0130-1	Top view equipment (room)	0	24-02-25	
11	0300-1	Electrical installation overview	0	24-02-25	
12	0310-1	Distribution board layout	0	24-02-25	
13	0320-1	Installation routing	0	24-02-25	
14	0400-1	Cabling diagram	0	24-02-25	
15	0500-1	Construction drawings	0	24-02-25	
16	0500-1	Construction drawings	0	24-02-25	
17	0501-1	Construction drawings	0	24-02-25	
18	0501-2	Construction drawings	0	24-02-25	
19	0504-1	Construction drawings	0	24-02-25	
20	0504-2	Construction drawings	0	24-02-25	
21	0505-1	Construction drawings	0	24-02-25	
22	0506-1	Construction drawings	0	24-02-25	

Place : 1092 CK Amsterdam
Address: Linnaeusstraat 2C
Area :

Site number :
4174

Drawing number :
0000-1

x/y: 123.413/486.096

Index

Scale n.a.

EP

Unit mm

3D

A3

Sheet 1 of 1 Sheets

Page 1

Rev.	Date	Mod.	Chk.
0	24-02-25	MIS	JAV

KPN - MOBILE

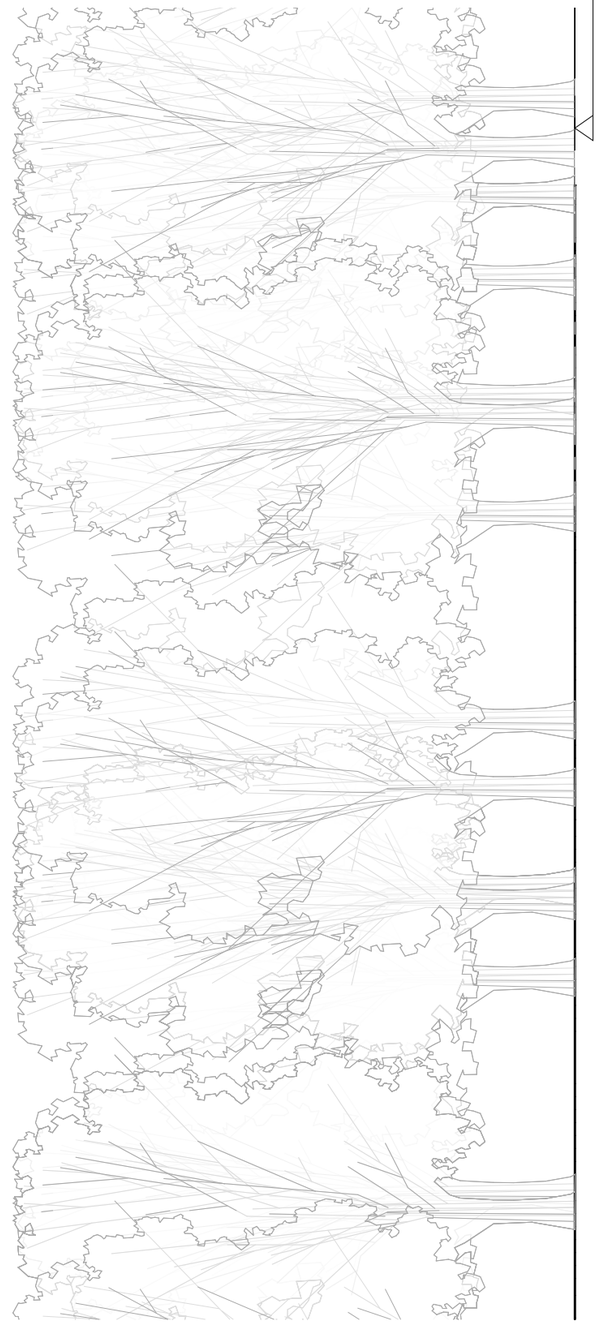

0 1 2 3 4 5 meters

0 1000 2000 3000 4000 5000 millimeters

Place : 1092 CK Amsterdam Address: Linnaeusstraat 2C Area :						Site number : 4174
						Drawing number : 0010-1
x/y: 123.413/486.096		Front view (existing)				
Scale 1 : 100		EP	Rev.	Date	Mod.	Chk.
Unit mm	3D	A3	0	24-02-25	MIS	JAV
Sheet 1 of 1 Sheets		Page 2				

KPN - MOBILE

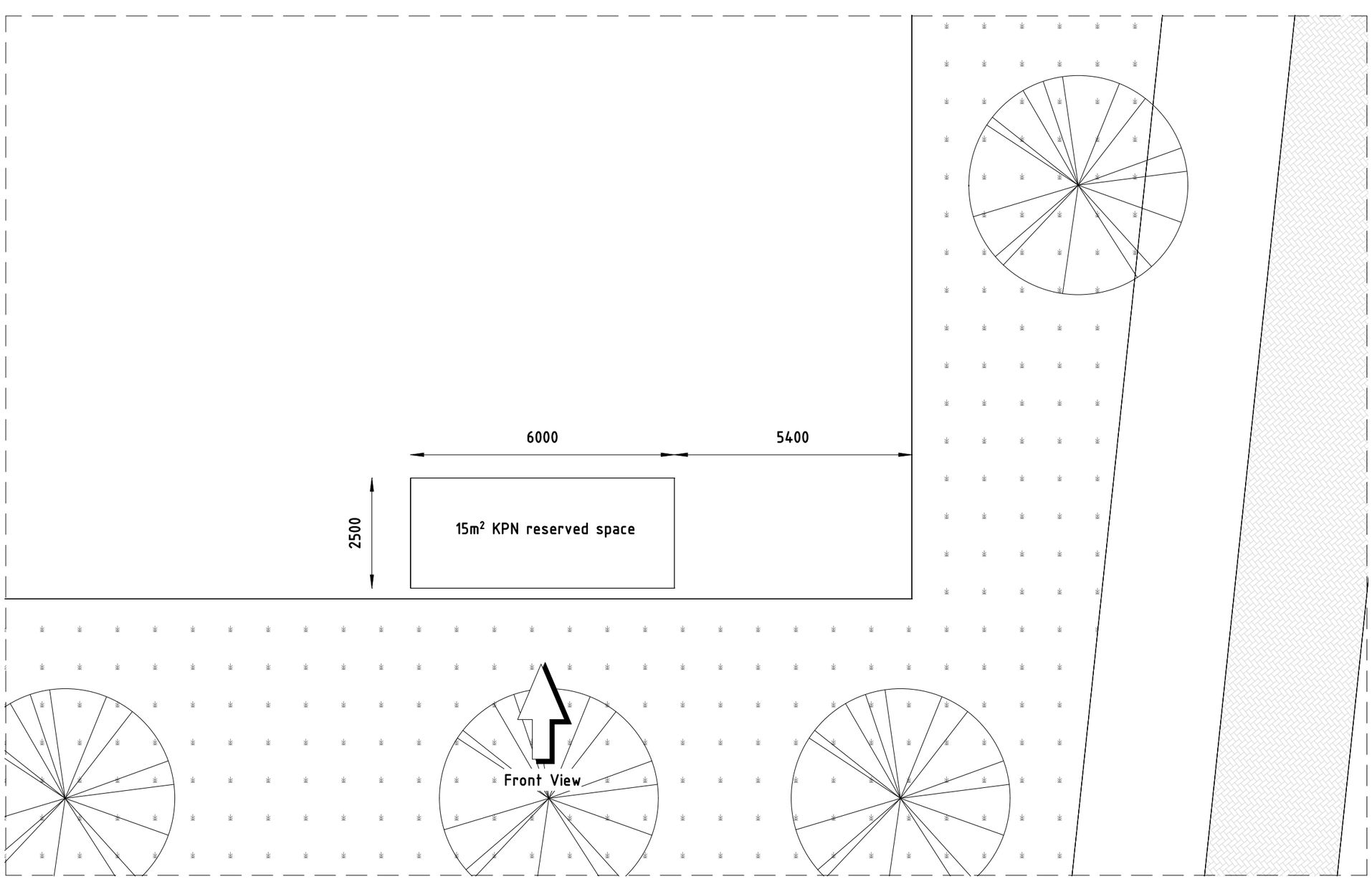

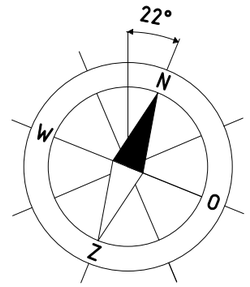

0 1 2 3 4 5 meters

0 1000 2000 3000 4000 5000 millimeters

Place : 1092 CK Amsterdam Address: Linnaeusstraat 2C Area :						Site number : 4174
						Drawing number : 0050-1
x/y: 123.413/486.096		Top view (existing)				
Scale 1 : 100		EP	Rev.	Date	Mod.	Chk.
Unit mm	3D	A3	0	24-02-25	MIS	JAV
Sheet 1 of 1 Sheets		Page 3				

KPN - MOBILE

Kadastrale kaart

Uw referentie: 4174 - 100147613



Deze kaart is noordgericht
12345 Perceelnummer
25 Huisnummer
Vastgestelde kadastrale grens
Voorlopige kadastrale grens
Administratieve kadastrale grens
Bebouwing

Voor een eensluidend uittreksel, geleverd op 4 juli 2023
De bewaarder van het kadaster en de openbare registers

Schaal 1: 1000

Kadastrale gemeente Amsterdam
Sectie S
Perceel 10189

Aan dit uittreksel kunnen geen betrouwbare maten worden ontleend.
De Dienst voor het kadaster en de openbare registers behoudt zich de intellectuele eigendomsrechten voor, waaronder het auteursrecht en het databankenrecht.

kadaster

Place : 1092 CK Amsterdam Address: Linnaeusstraat 2C Area :						Site number : 4174
						Drawing number : 0060-1
x/y: 123.413/486.096		Land Registry Situation				
Scale		EP	Rev.	Date	Mod.	Chk.
Unit mm	3D	A3	0	24-02-25	MIS	JAV
Sheet 1 of 1 Sheets		Page 4				

KPN - MOBILE

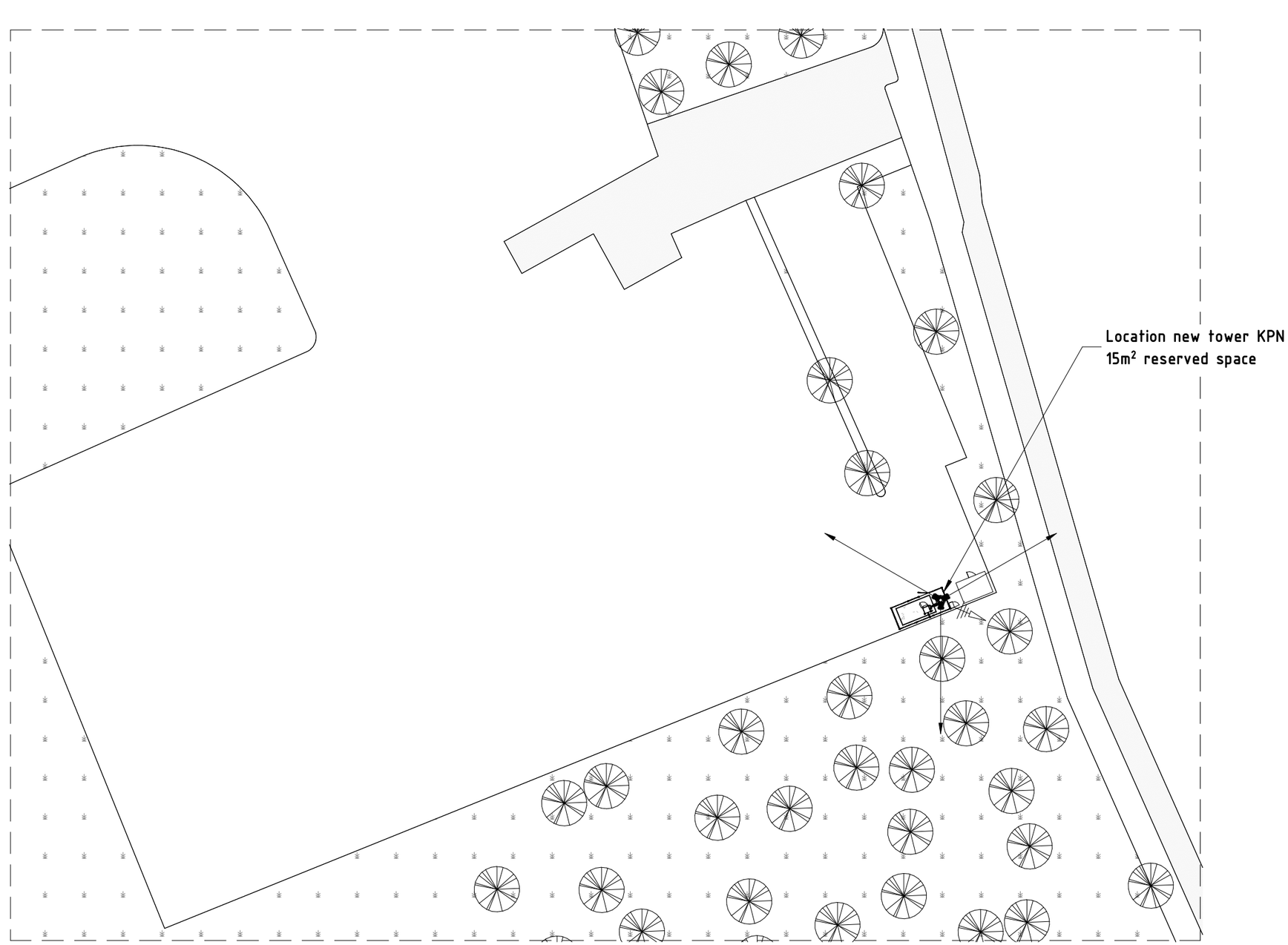

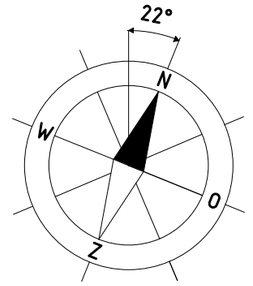

0 5 10 15 20 25 meters

0 5000 10000 15000 20000 25000 millimeters

Place : 1092 CK Amsterdam Address: Linnaeusstraat 2C Area :						Site number : 4174
						Drawing number : 0061-1
x/y: 123.413/486.096	Contract drawing					
Scale 1 : 500	EP	Rev.	Date	Mod.	Chk.	kpn
Unit mm 3D	A3	0	24-02-25	MIS	JAV	
Sheet 1 of 1 Sheets	Page 5					

KPN - MOBILE

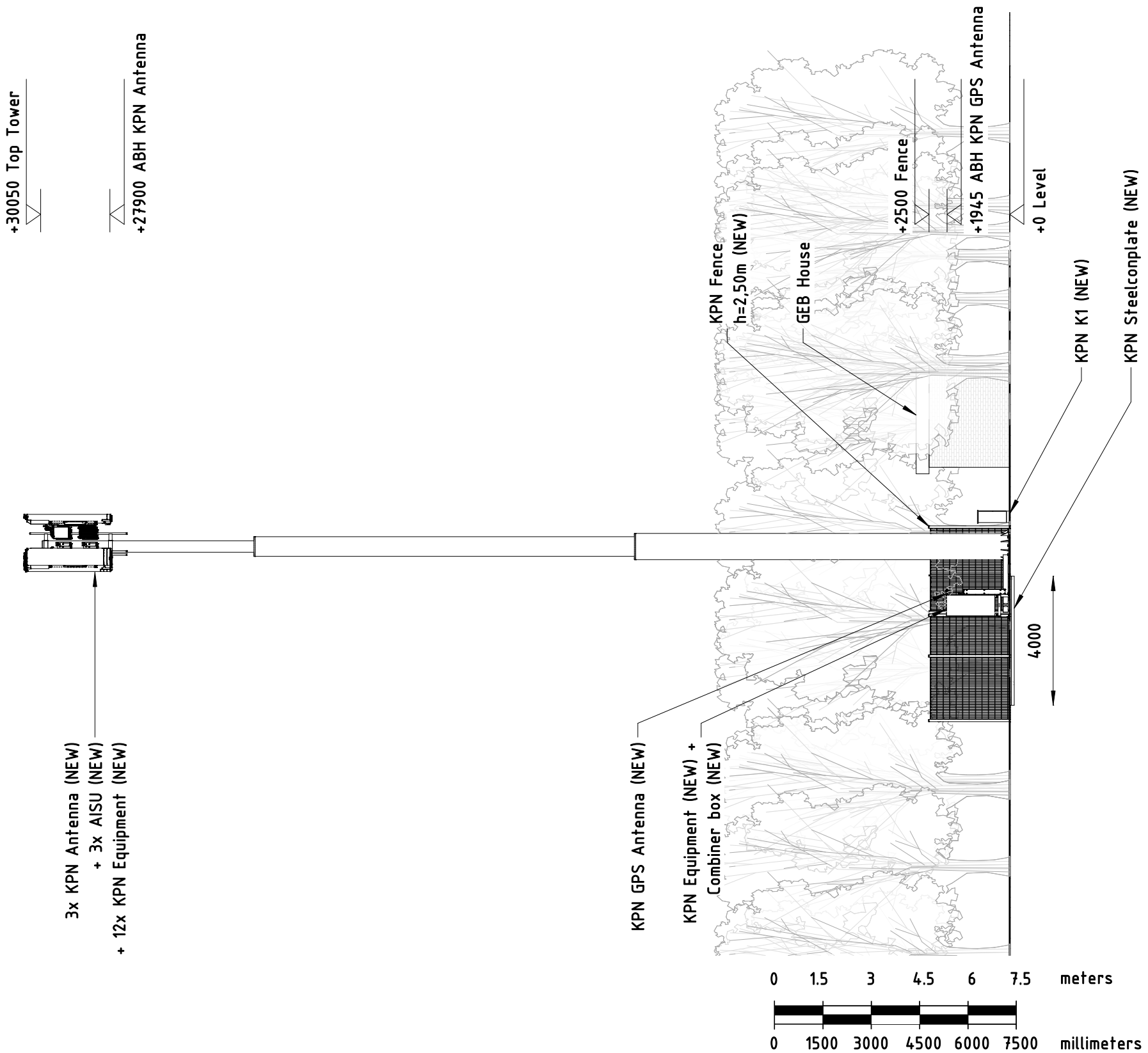

KPN Antenna Configuration Table (NEW)					
Sector	Antenna type	RRH	Azimuth	Height	Fiber Length
S1	AAU5855n	5509t + 2x 5301 + 5866	60°	+27.90 m	4 x 50m
S2	AAU5855n	5509t + 2x 5301 + 5866	180°	+27.90 m	4 x 50m
S3	AAU5855n	5509t + 2x 5301 + 5866	300°	+27.90 m	4 x 50m

Place : 1092 CK Amsterdam
Address: Linnaeusstraat 2C
Area :

Site number : 4174

Drawing number : 0100-1

x/y: 123.413/486.096

Technical front view

Scale 1 : 150 | EP | Unit mm | 3D | A3 | Sheet 1 of 1 Sheets | Page 6

Rev.	Date	Mod.	Chk.
0	24-02-25	MIS	JAV

KPN - MOBILE

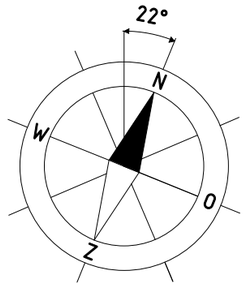

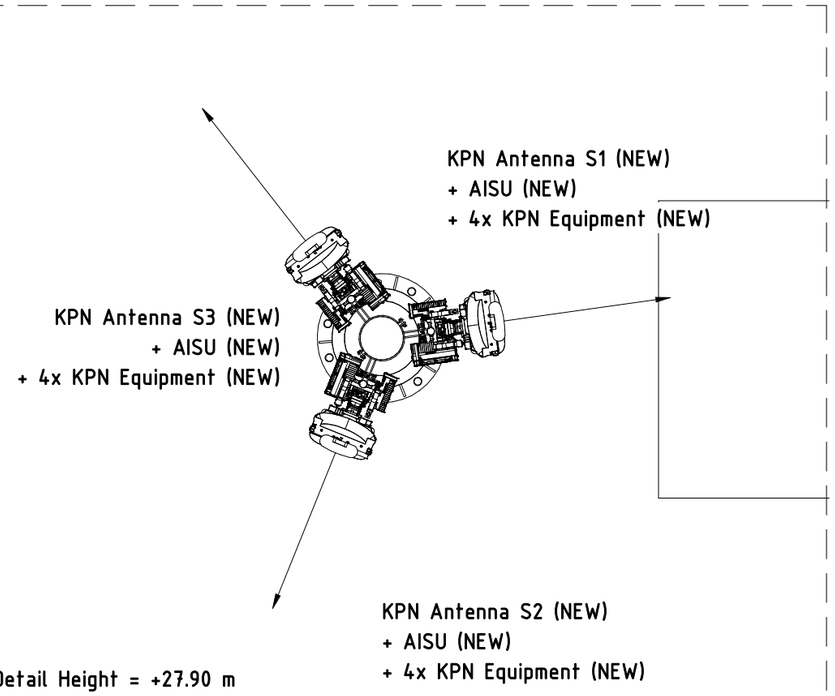

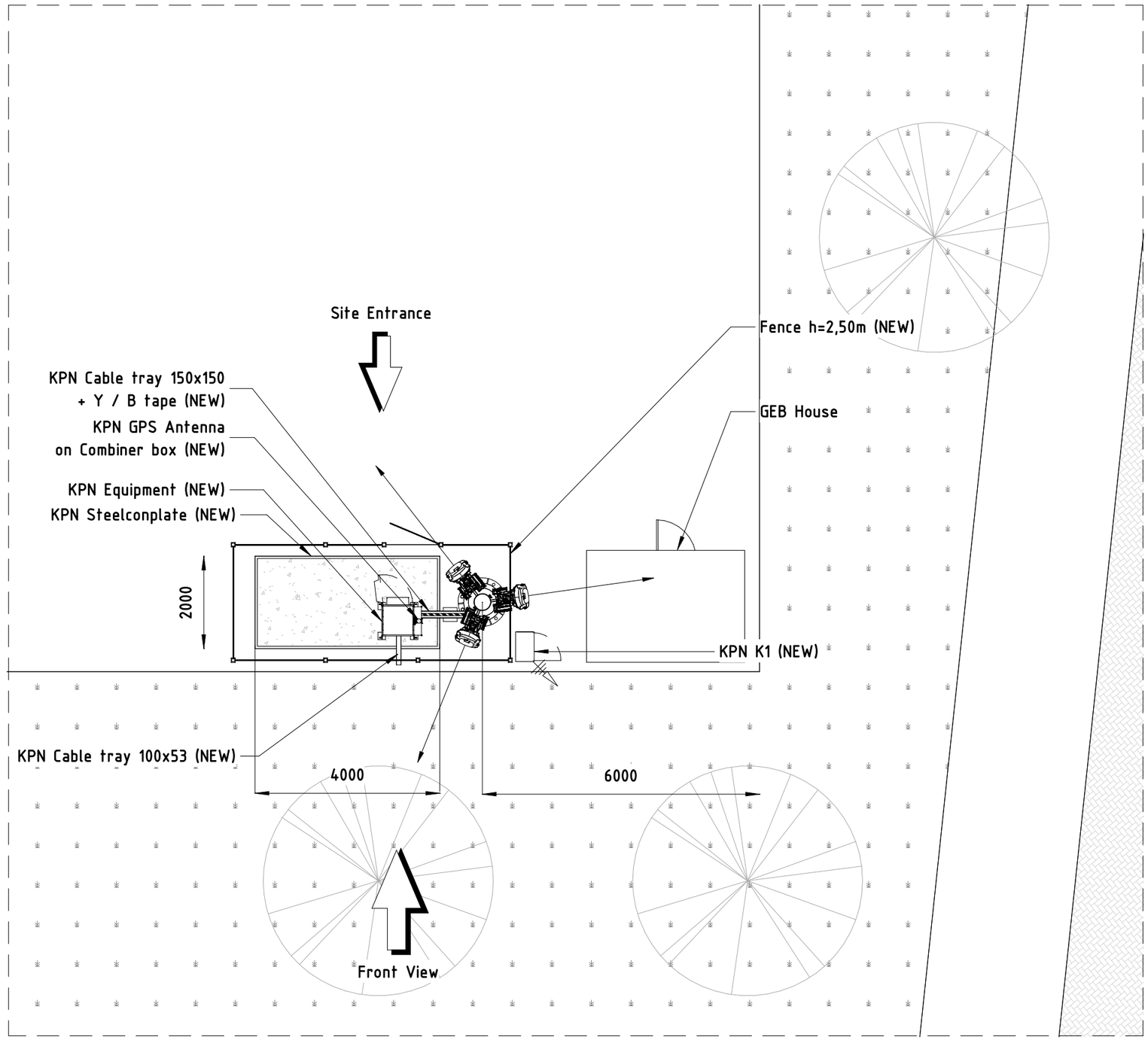

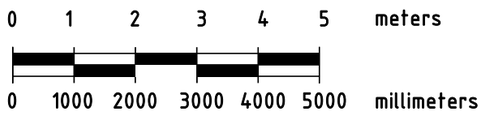

KPN Antenna Configuration Table (NEW)					
Sector	Antenna type	RRH	Azimuth	Height	Fiber Length
S1	AAU5855n	5509t + 2x 5301 + 5866	60°	+27.90 m	4 x 50m
S2	AAU5855n	5509t + 2x 5301 + 5866	180°	+27.90 m	4 x 50m
S3	AAU5855n	5509t + 2x 5301 + 5866	300°	+27.90 m	4 x 50m

Place : 1092 CK Amsterdam
Address: Linnaeusstraat 2C
Area :

Site number : 4174

Drawing number : 0110-1

x/y: 123.413/486.096 | Technical top view

Scale 1 : 100	EP	Rev.	Date	Mod.	Chk.
Unit mm	3D A3	0	24-02-25	MIS	JAV
Sheet 1 of 1 Sheets	Page 7				

KPN - MOBILE

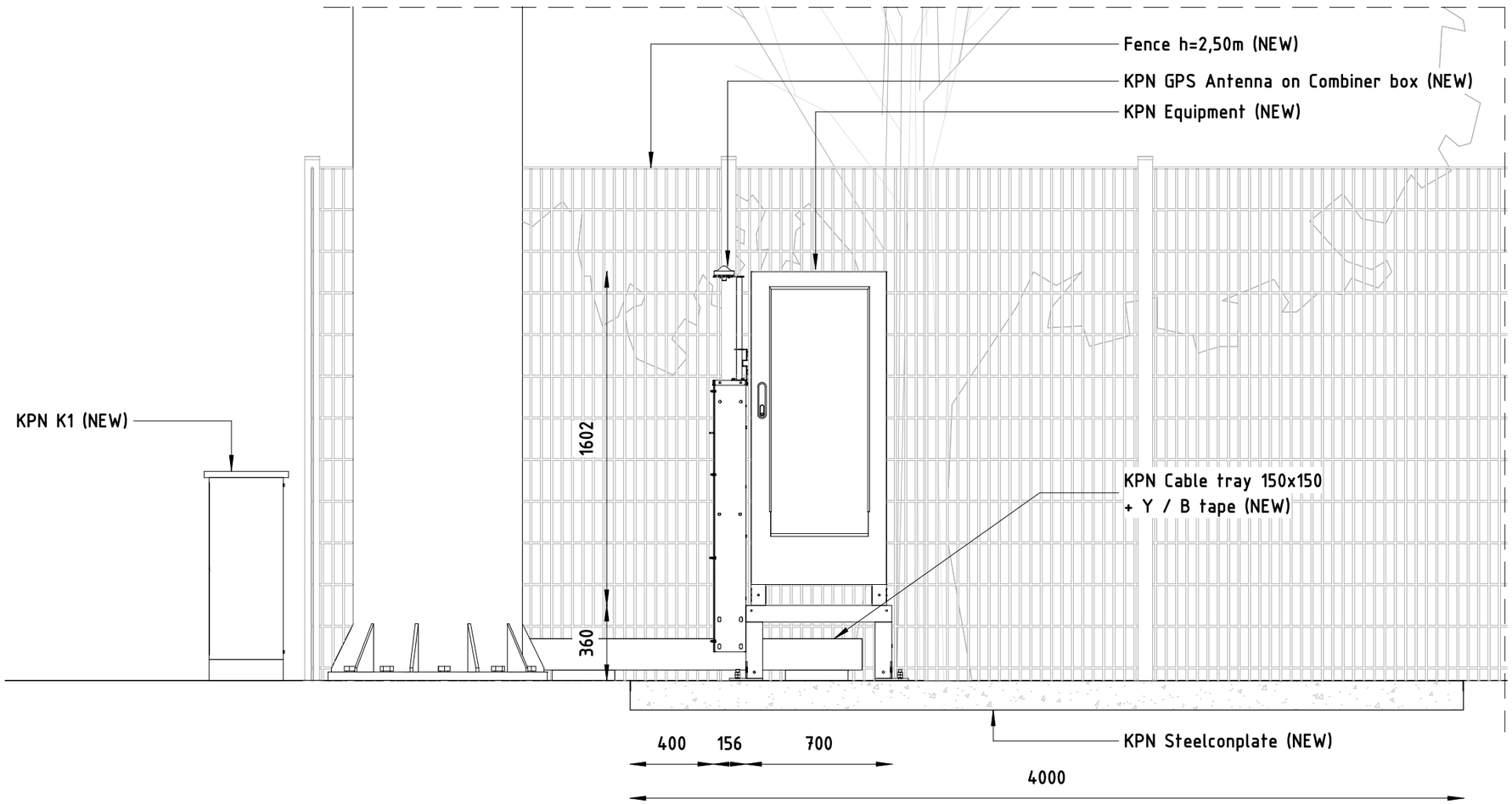

0 0.25 0.5 0.75 1 1.25 meters

0 250 500 750 1000 1250 millimeters

Place : 1092 CK Amsterdam Address: Linnaeusstraat 2C Area :						Site number : 4174
						Drawing number : 0120-1
x/y: 123.413/486.096		Front view equipment (room)				
Scale 1 : 25		EP	Rev.	Date	Mod.	Chk.
Unit mm	3D	A3	0	24-02-25	MIS	JAV
Sheet 1 of 2 Sheets		Page 8				

KPN - MOBILE

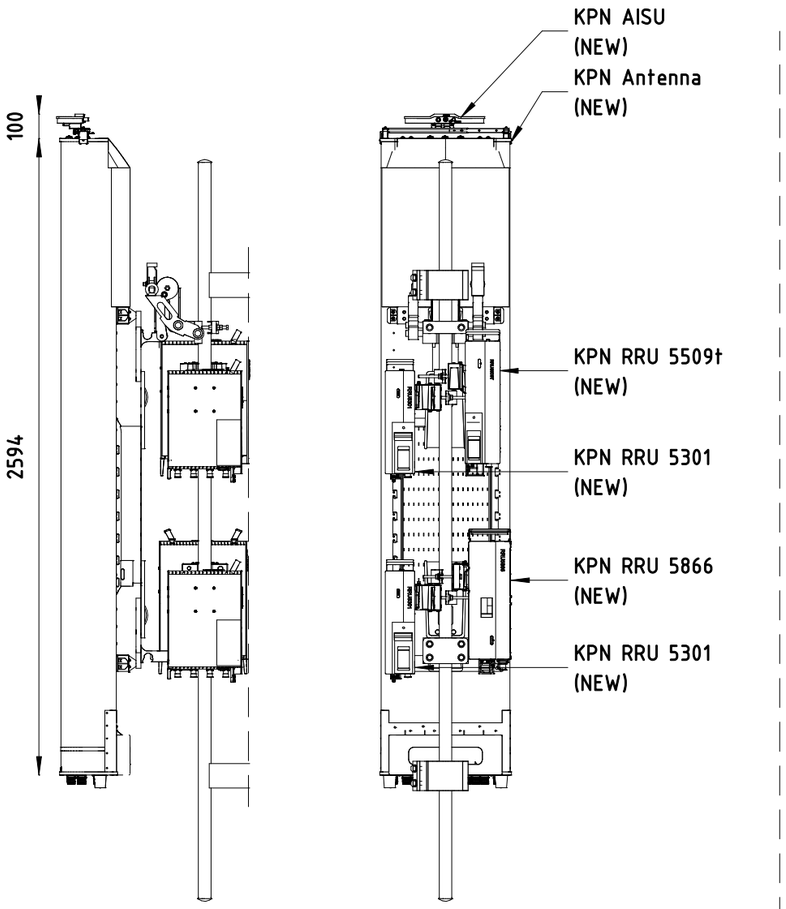

SECTOR 1

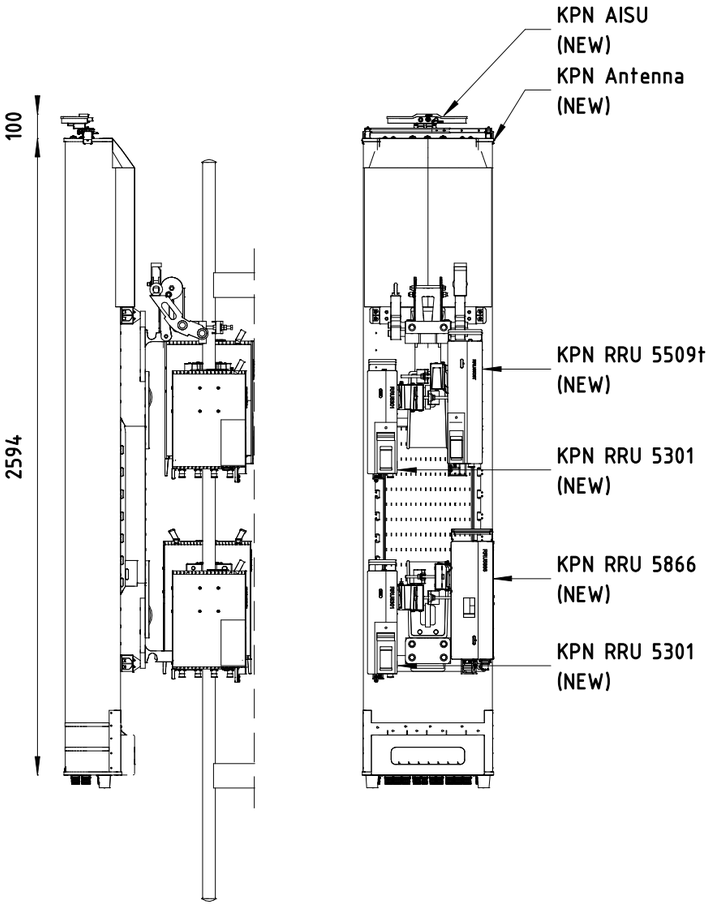

SECTOR 2

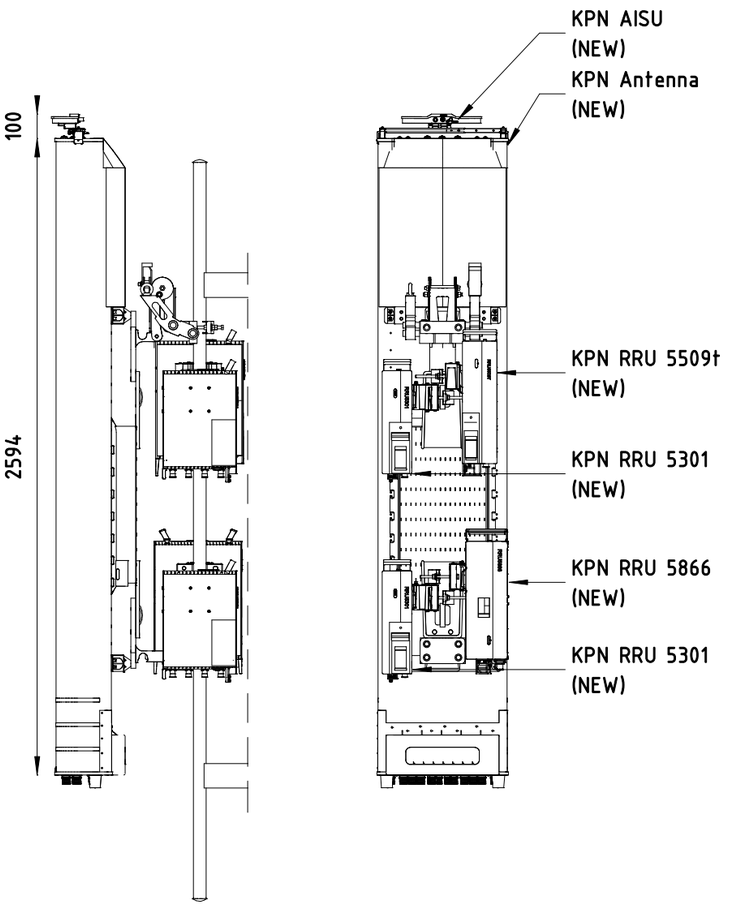

SECTOR 3



Place : 1092 CK Amsterdam Address: Linnaeusstraat 2C Area :						Site number : 4174
						Drawing number : 0120-2
x/y: 123.413/486.096	Front view equipment (room)					
Scale 1 : 25	EP	Rev.	Date	Mod.	Chk.	kpn
Unit mm 3D	A3	0	24-02-25	MIS	JAV	
Sheet 2 of 2 Sheets	Page 9					

KPN - MOBILE

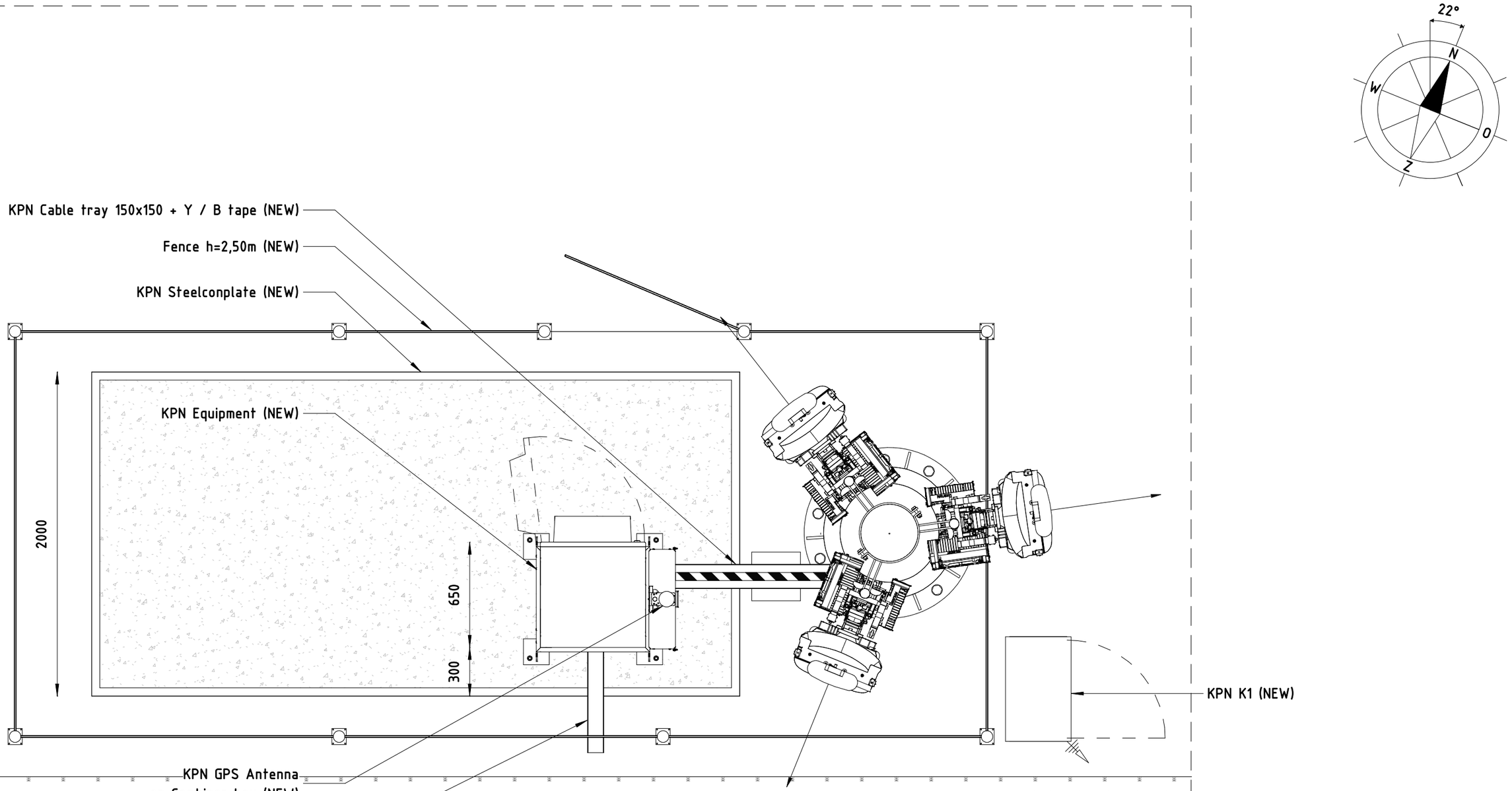

0 0.25 0.5 0.75 1 1.25 meters

0 250 500 750 1000 1250 millimeters

Place : 1092 CK Amsterdam Address: Linnaeusstraat 2C Area :						Site number : 4174
						Drawing number : 0130-1
x/y: 123.413/486.096	Top view equipment (room)					
Scale 1 : 25	EP	Rev.	Date	Mod.	Chk.	kpn
Unit mm 3D	A3	0	24-02-25	MIS	JAV	
Sheet 1 of 1 Sheets	Page 10					

KPN - MOBILE

KPN K1

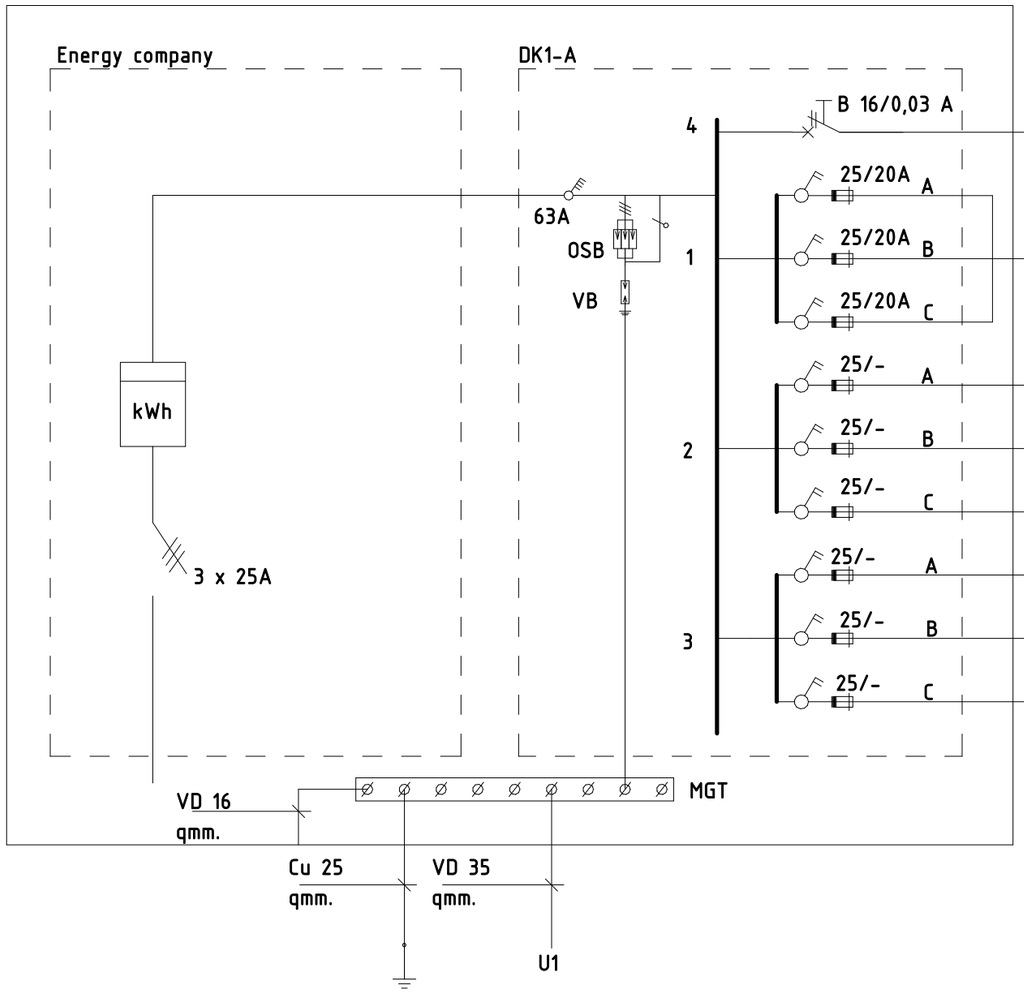

					CONNECTION VALUE IN VA			
				VARIOUS	L1	L2	L3	TOTAL
Ymvk -as 4x6mm2		1		U1	5100	5100	2600	12800
				Reserve				
				Reserve				
				Reserve				
				Reserve				
				Reserve				
				Reserve				
					5100	5100	2600	12800

Place : 1092 CK Amsterdam
Address: Linnaeusstraat 2C
Area :

Site number : 4174

Drawing number : 0300-1

x/y: 123.413/486.096

Electrical installation overview

Scale	n.a.		EP	Rev.	Date	Mod.	Chk.
Unit	mm	3D	A3	0	24-02-25	MIS	JAV
Sheet	1 of 2 Sheets		Page 11				

KPN - MOBILE

KPN K1

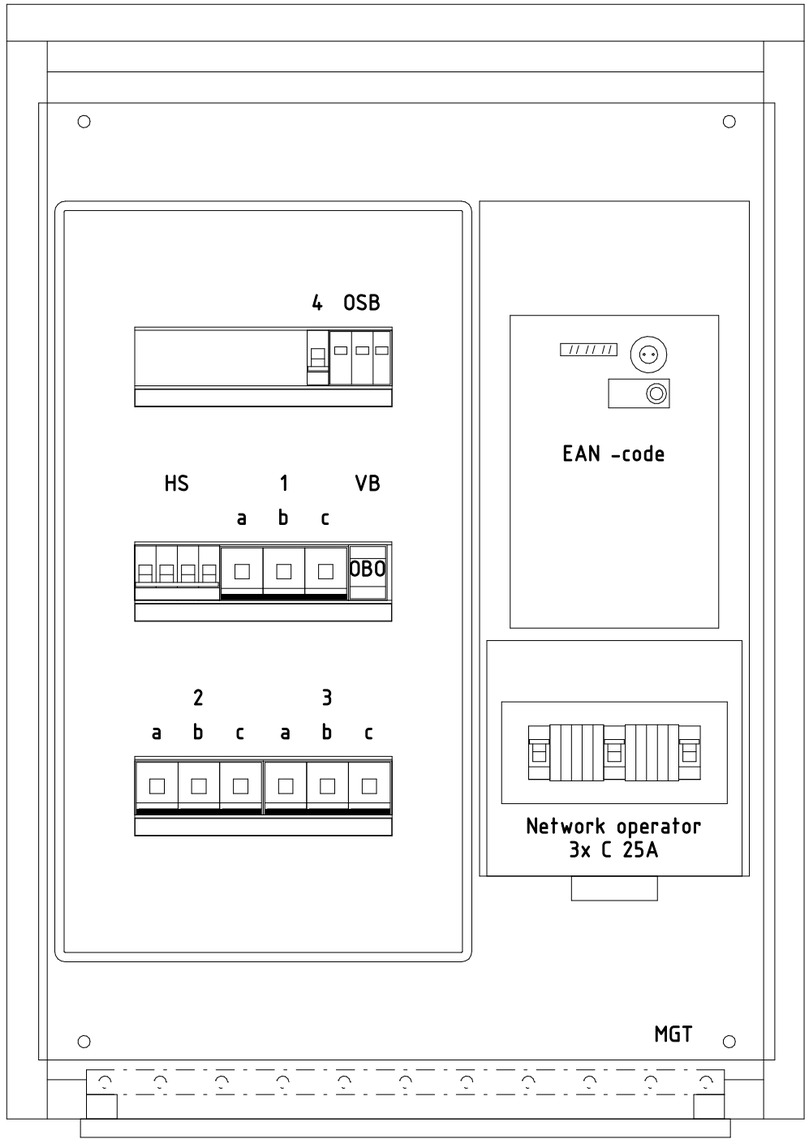

Place : 1092 CK Amsterdam Address: Linnaeusstraat 2C Area :						Site number : 4174
						Drawing number : 0310-1
x/y: 123.413/486.096	Distribution board layout					
Scale 1 : 5	EP	Rev.	Date	Mod.	Chk.	kpn
Unit mm 3D	A3	0	24-02-25	MIS	JAV	
Sheet 1 of 2 Sheets	Page 12					

KPN - MOBILE

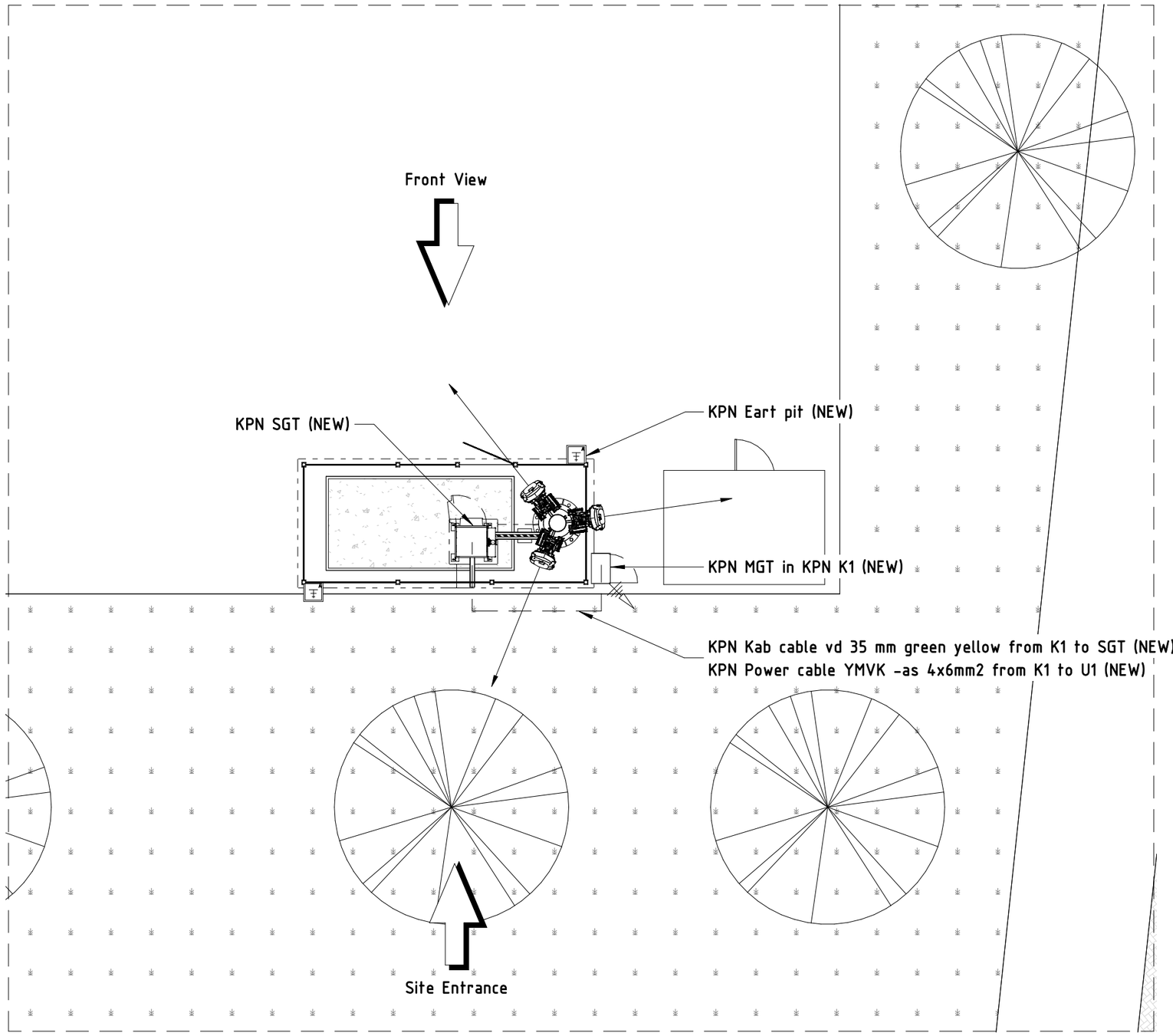

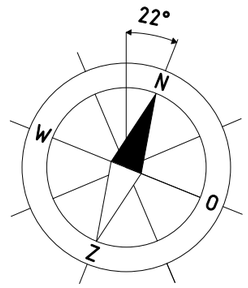

0 1 2 3 4 5 meters

0 1000 2000 3000 4000 5000 millimeters

Place : 1092 CK Amsterdam Address: Linnaeusstraat 2C Area :						Site number : 4174
						Drawing number : 0320-1
x/y: 123.413/486.096	Installation routing					
Scale 1 : 100	EP	Rev.	Date	Mod.	Chk.	kpn
Unit mm 3D	A3	0	24-02-25	MIS	JAV	
Sheet 1 of 1 Sheets	Page 13					

KPN - MOBILE

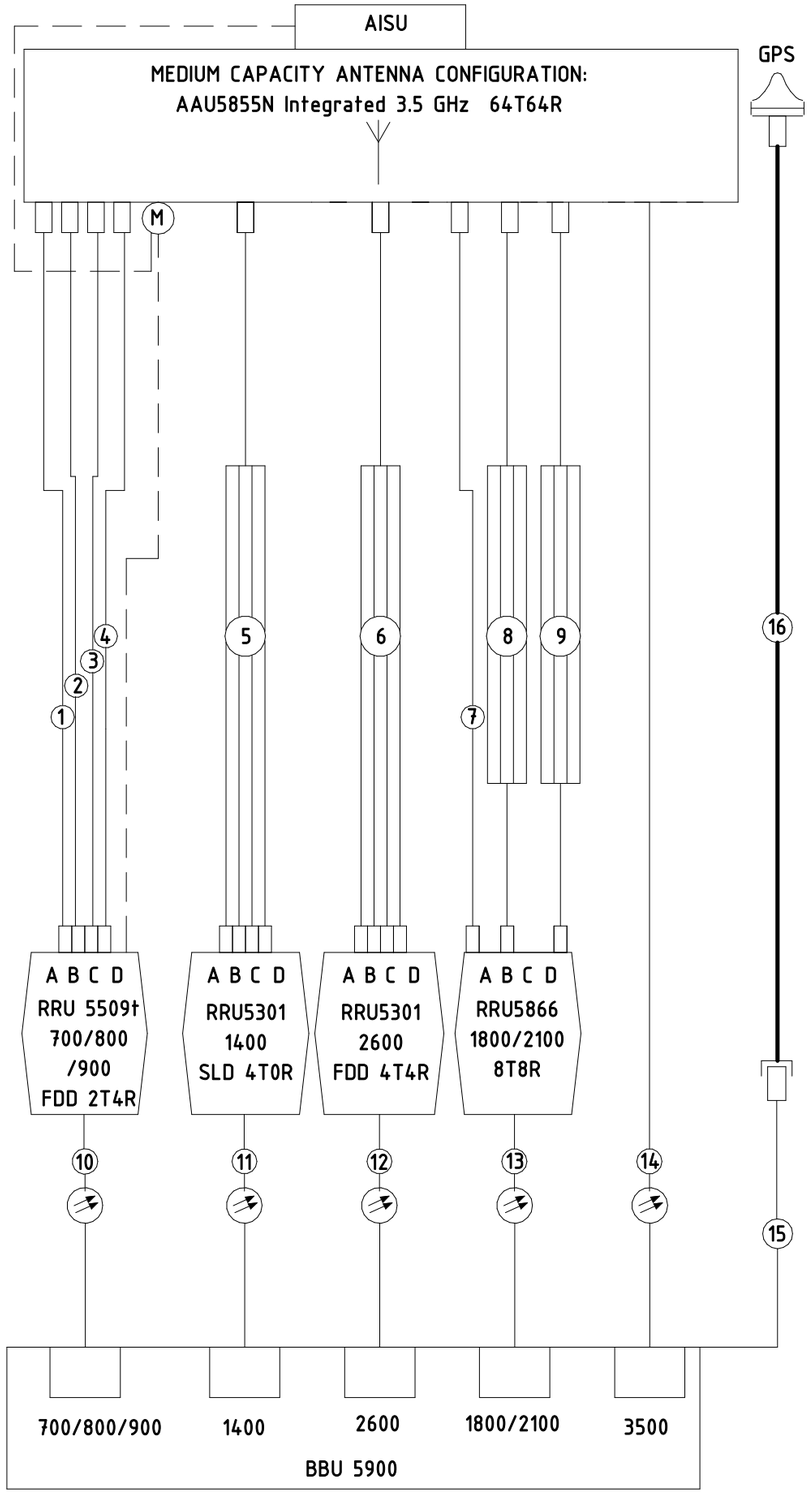

RRU TO ANTENNA JUMPER CONNECTIONS				
NO.		Sector 1	Sector 2	Sector 3
	Type: Dia: Connector:	SCF 1/2" 4.3/10"Mx4.3/10"M	SCF 1/2" 4.3/10"Mx4.3/10"M	SCF 1/2" 4.3/10"Mx4.3/10"M
1	Length:	2m	2m	2m
2	Length:	2m	2m	2m
3	Length:	2m	2m	2m
4	Length:	2m	2m	2m
7	Length:	2m	2m	2m

RRU TO ANTENNA JUMPER CONNECTIONS				
NO.		Sector 1	Sector 2	Sector 3
	Type: Dia: Connector:	SCF 1/3" 4.3-10"M x MQ4	SCF 1/3" 4.3-10"M x MQ4	SCF 1/3" 4.3-10"M x MQ4
5	Length:	2m	2m	2m
6	Length:	2m	2m	2m

RRU TO ANTENNA JUMPER CONNECTIONS				
NO.		Sector 1	Sector 2	Sector 3
	Type: Dia: Connector:	SCF 1/3" 4.3/10"Mx4.3/10"M	SCF 1/3" 4.3/10"Mx4.3/10"M	SCF 1/3" 4.3/10"Mx4.3/10"M
8	Length:	2m	2m	2m
9	Length:	2m	2m	2m

BBU TO RRU FIBER CONNECTION				
NO.		Sector 1	Sector 2	Sector 3
	Type: Connector:	SM 0.03m/0.34m SFP 9.8/10G SM	SM 0.03m/0.34m SFP 9.8/10G SM	SM 0.03m/0.34m SFP 9.8/10G SM
10	Length:	50m	50m	50m
11	Length:	50m	50m	50m
12	Length:	50m	50m	50m
13	Length:	50m	50m	50m
14	Length:	70m	70m	70m

BBU TO GPS ANTENNA JUMPER CONNECTION		
NO.	Type: Dia: Connector:	RF Cable - SMA -M x N -F
15	Length:	5m

GPS ANTENNA FEEDER CONNECTION		
NO.	Type: Dia: Connector:	RG-8U - NMXNM
16	Length:	3m

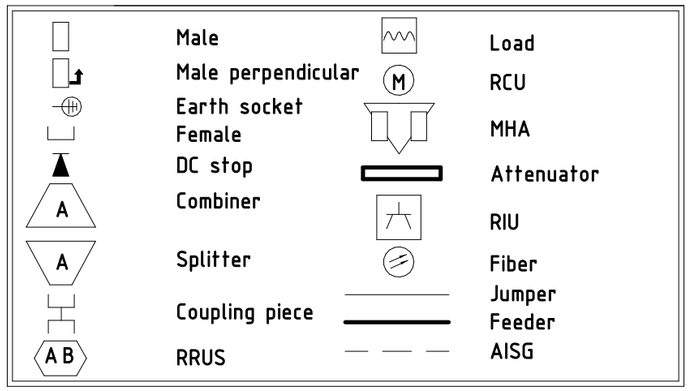

Place : 1092 CK Amsterdam
Address: Linnaeusstraat 2C
Area :

Site number : 4174

Drawing number : 0400-1

x/y: 123.413/486.096

Cabling diagram

Scale	n.a.		EP	Rev.	Date	Mod.	Chk.
Unit	mm	3D	A3	0	24-02-25	MIS	JAV
Sheet	1 of 1 Sheets		Page 14				

KPN - MOBILE

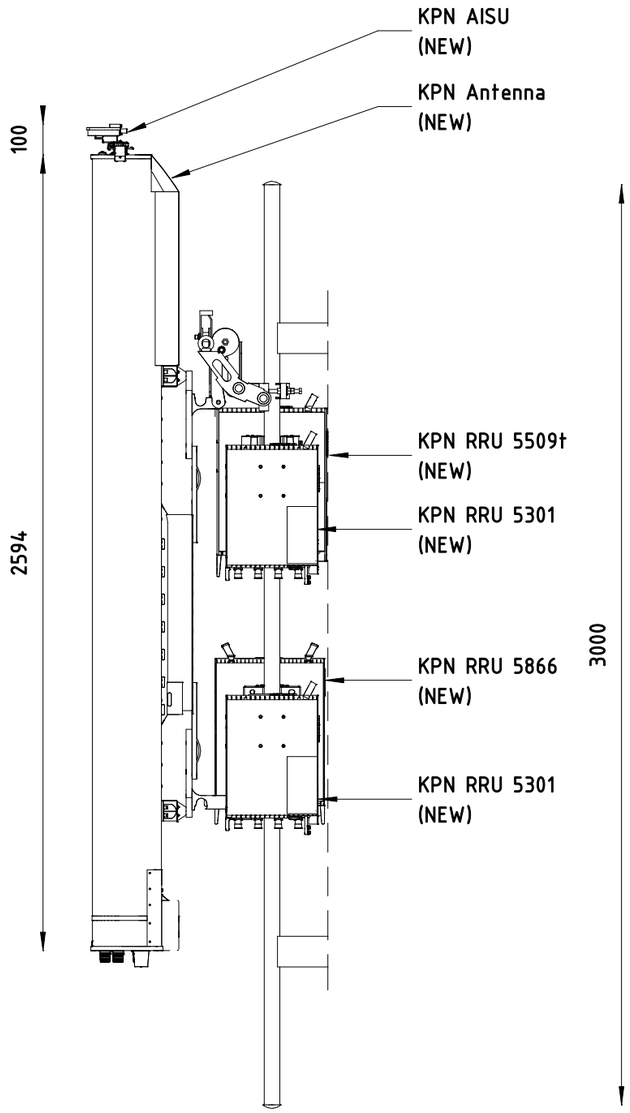

0 0.2 0.4 0.6 0.8 1 meters

0 200 400 600 800 1000 millimeters

Place : 1092 CK Amsterdam Address: Linnaeusstraat 2C Area :						Site number : 4174
						Drawing number : 0500-1
x/y: 123.413/486.096		Construction drawings				
Scale		EP	Rev.	Date	Mod.	Chk.
Unit mm	3D	A3	0	24-02-25	MIS	JAV
Sheet 1 of 2 Sheets		Page 15				

KPN - MOBILE

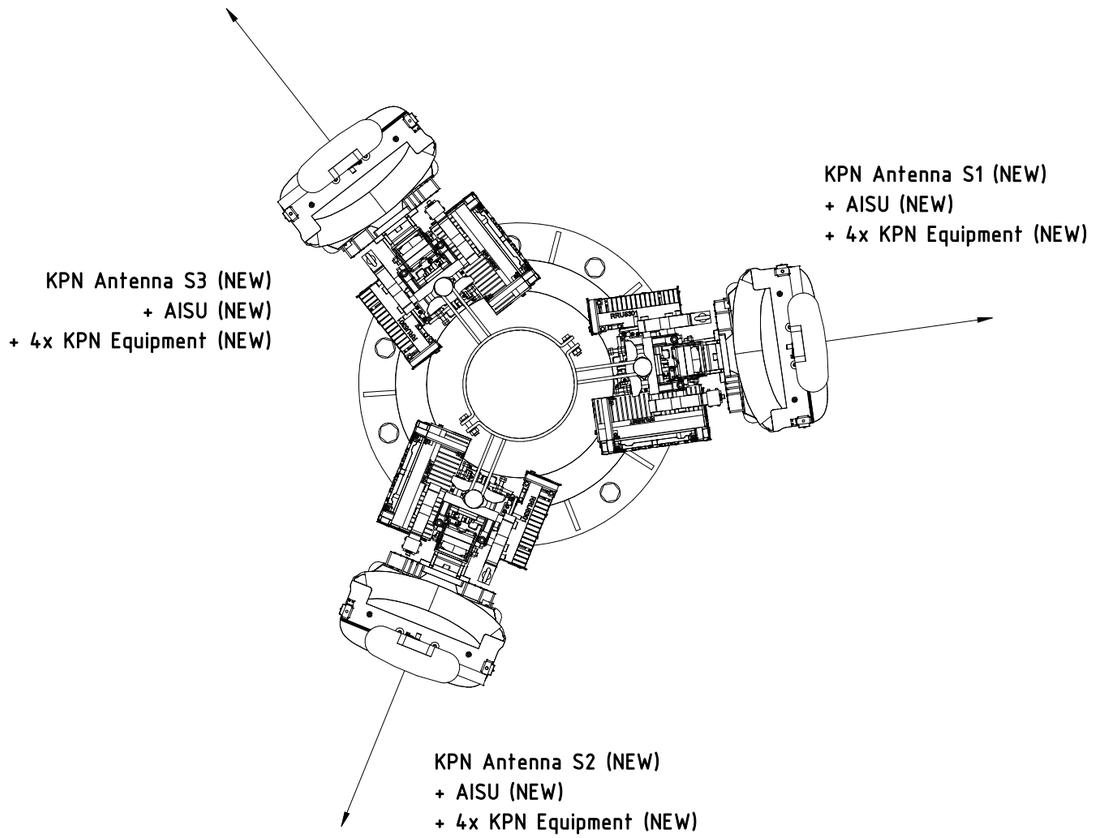

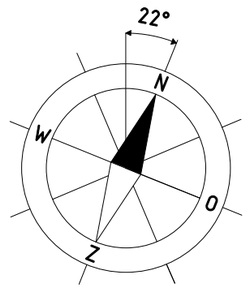

0 0.2 0.4 0.6 0.8 1 meters

0 200 400 600 800 1000 millimeters

Place : 1092 CK Amsterdam
Address: Linnaeusstraat 2C
Area :

Site number : 4174

Drawing number : 0500-1

x/y: 123.413/486.096

Construction drawings

Scale 1 : 20

EP

Unit mm

3D

A3

Sheet 1 of 2 Sheets

Page 16

Rev.	Date	Mod.	Chk.
0	24-02-25	MIS	JAV

KPN - MOBILE

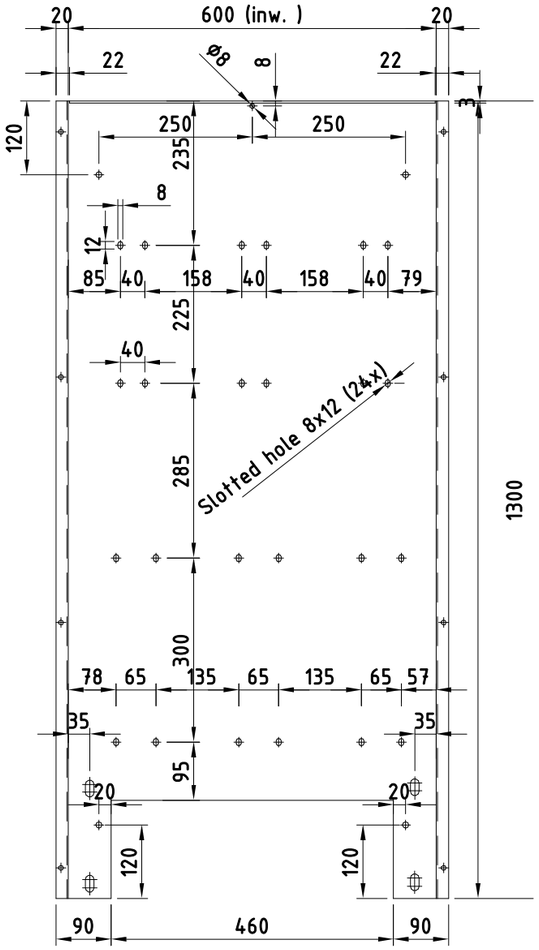

FRONT VIEW
POS 1

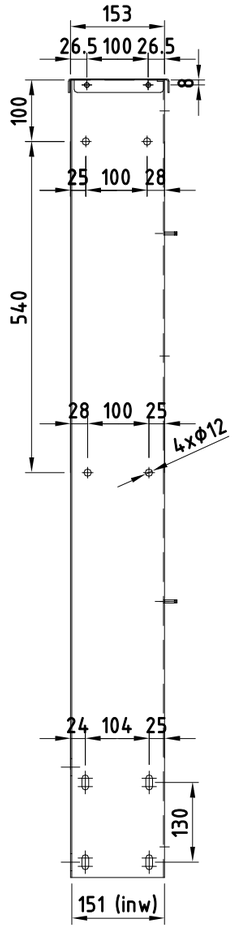

SIDE VIEW
POS 1

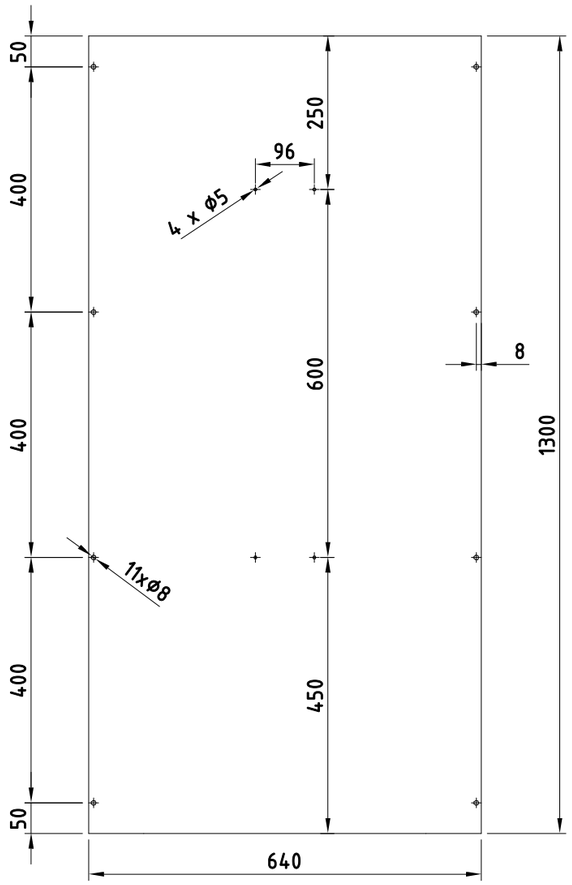

COVER
POS 2

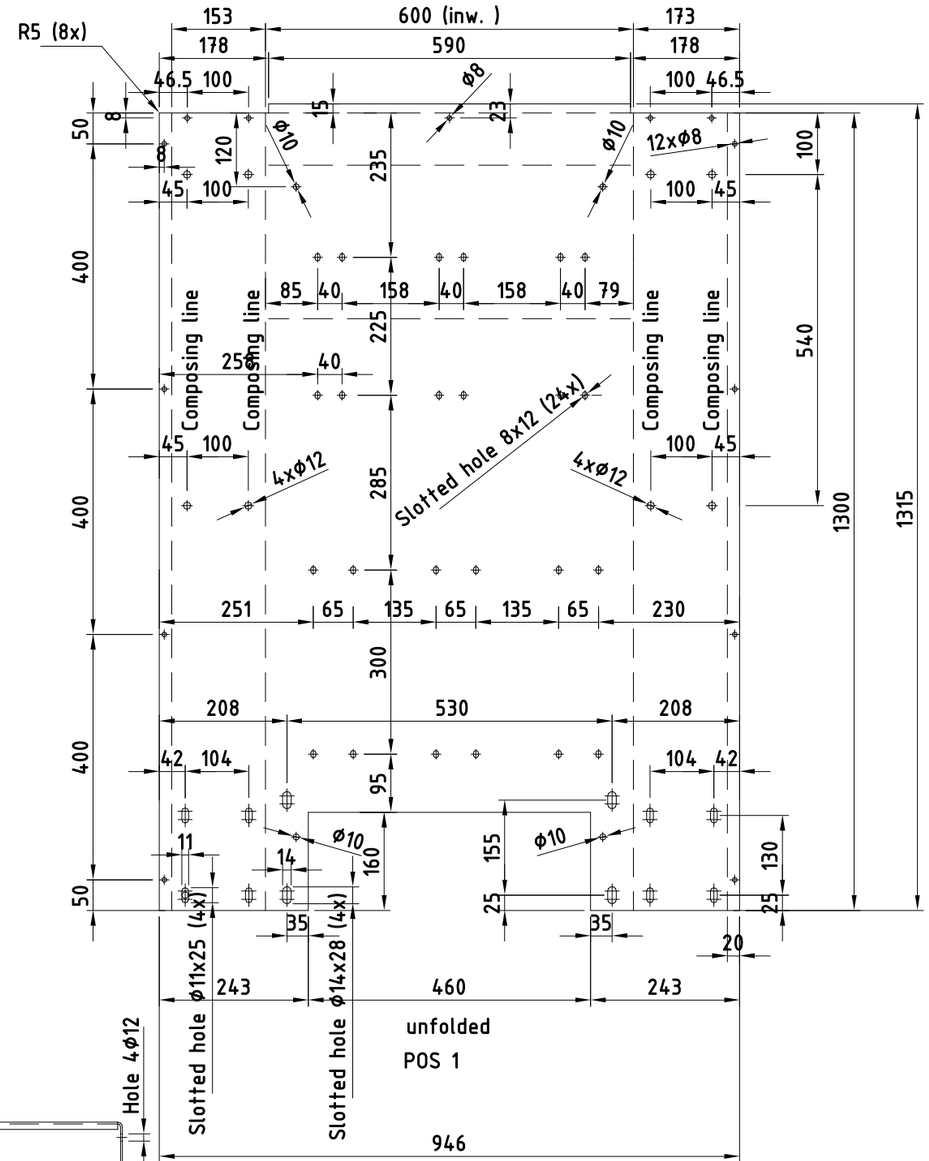

unfolded
POS 1

NEW

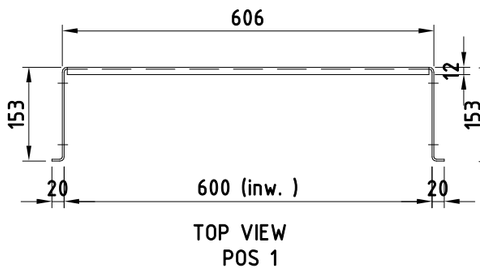

TOP VIEW
POS 1

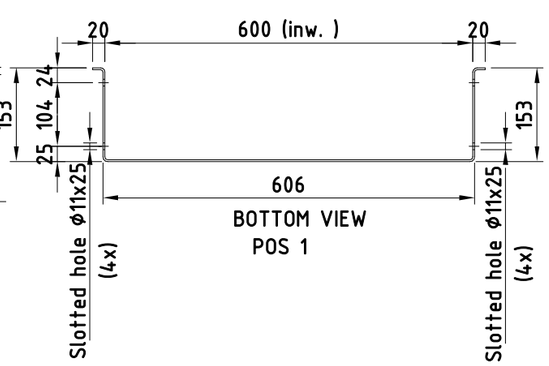

BOTTOM VIEW
POS 1

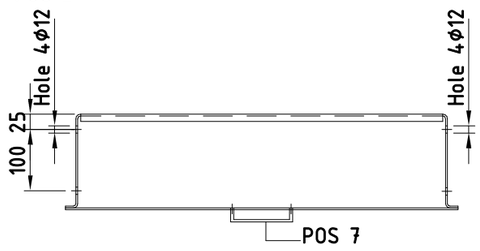

TOP VIEW
POS 1

- Construction 1x applied
- Material HDG / SST

pos.nr.	Amount	Description	Dimensioning	Material	Comments	Supplier	Item nr.
1	01	Plate, 946x3mm	L=1315mm	HDG			
2	01	Plate, 640x3mm	L=1300mm	ALUMINUM			
3	04	Bolt, M12 (8x Nordlock ring+8x nut)	L=50mm	HDG 8.8			
4	32	Bolt, M6 (64x Nordlock ring+32 nut)	L=20mm	HDG 8.8			
5	24	Bolt, M6 (48x ring+32 nut)	L=20mm	HDG 8.8			
6	02	Hexagonal spacer bush M5	L=20mm	HDG 8.8	Bolt, M5x10mm +1xring M5		
7	02	Handle type: Berma J20250	L=96x10mm	SST	Bolt, 2xM4x8mm +2xring M4		

Place : 1092 CK Amsterdam
Address: Linnaeusstraat 2C
Area :

Site number : 4174

Drawing number : 0501-1

x/y: 123.413/486.096

Construction drawings

Scale 1 : 10 | EP | A3

Unit mm | 3D

Sheet 1 of 2 Sheets | Page 17

Rev.	Date	Mod.	Chk.
0	24-02-25	MIS	JAV

KPN - MOBILE

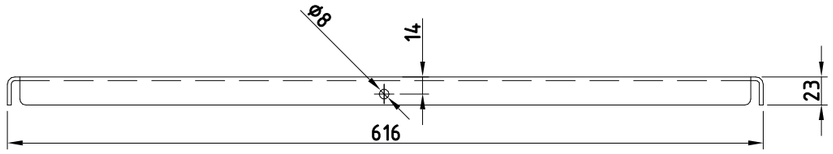

Front view

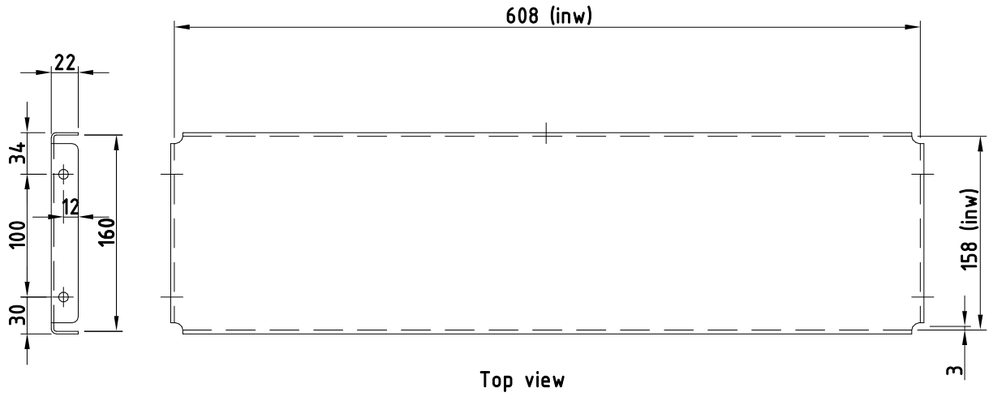

Top view

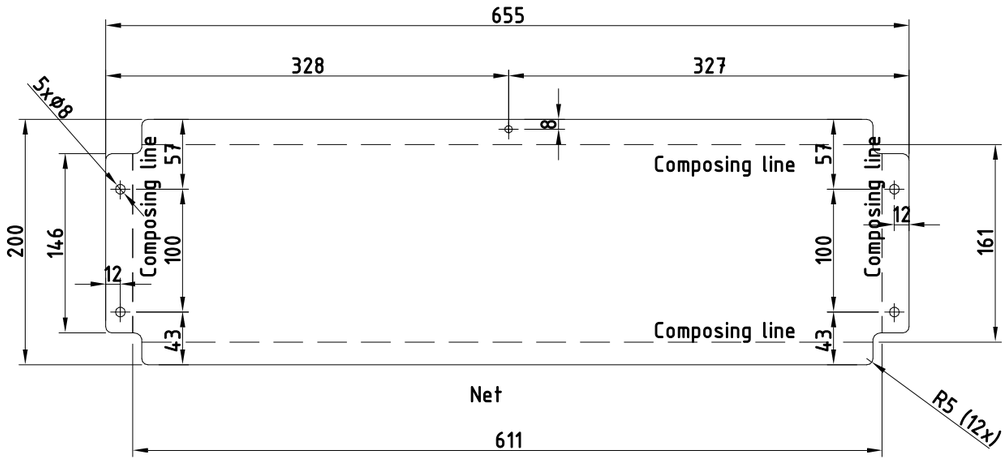

NEW

- Construction 1x applied
- Material HDG / SST

pos.nr.	Amount	Description	Dimensioning	Material	Comments	Supplier	Item nr.
1	01	Plate, 196x2mm	L=650mm	HDG			
2	05	Bolt, M6 (10x ring+5x nut)	L=50mm	HDG 8.8			

Place : 1092 CK Amsterdam
Address: Linnaeusstraat 2C
Area :

Site number : 4174

Drawing number : 0501-2

x/y: 123.413/486.096 | Construction drawings

Scale 1 : 5		EP	Rev.	Date	Mod.	Chk.
Unit mm	3D	A3	0	24-02-25	MIS	JAV
Sheet 2 of 2 Sheets		Page 18				

KPN - MOBILE

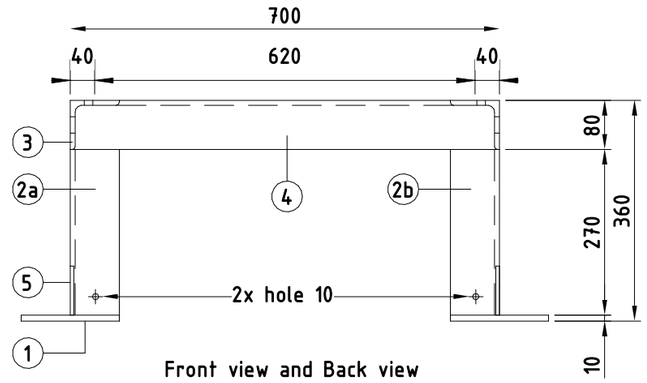

Front view and Back view

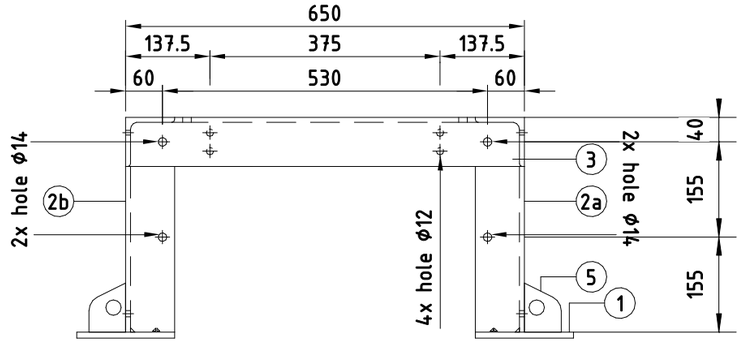

Side view (both sides)

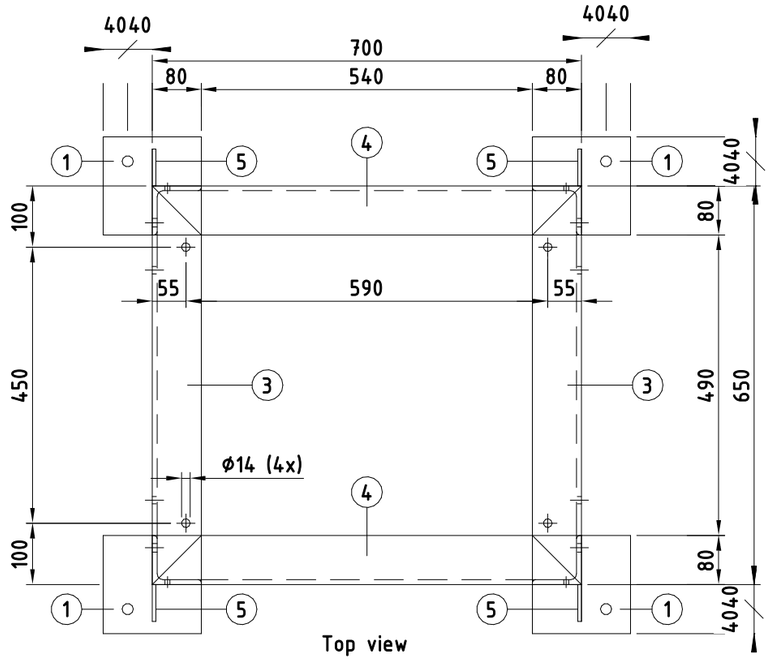

Top view

NEW

Place : 1092 CK Amsterdam Address: Linnaeusstraat 2C Area :					Site number : 4174
					Drawing number : 0504-1
x/y: 123.413/486.096	Construction drawings				
Scale	EP	Rev.	Date	Mod.	Chk.
Unit mm 3D	A3	0	24-02-25	MIS	JAV
Sheet 1 of 2 Sheets	Page 19				

KPN - MOBILE

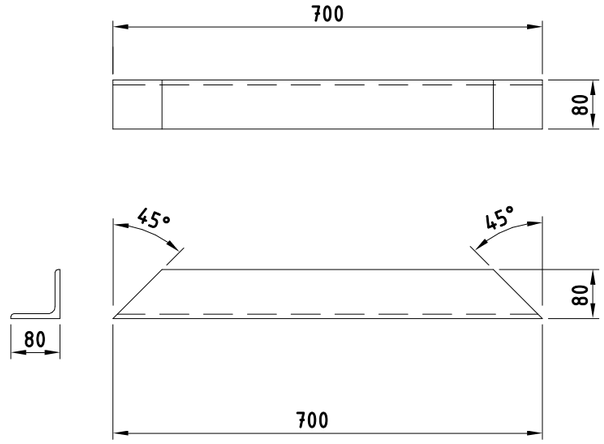

POS 4

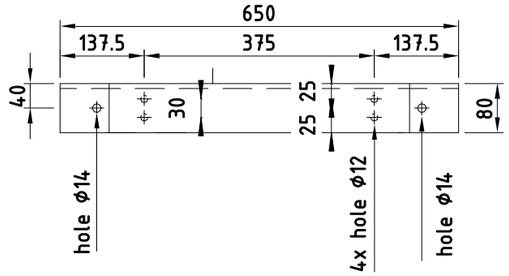

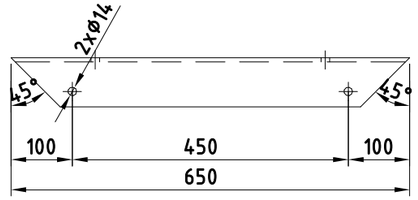

POS 3

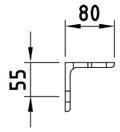

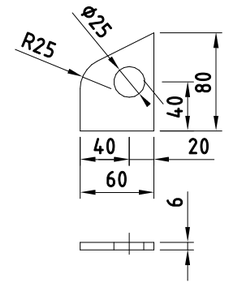

POS 5

Scale 1:5

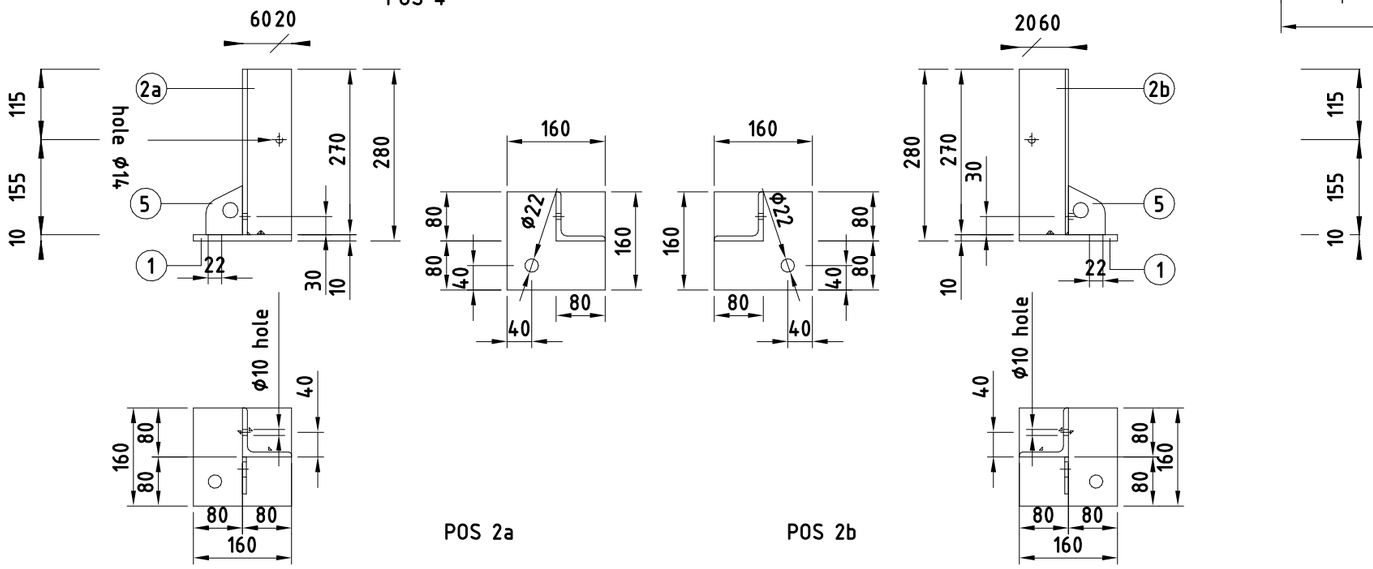

POS 2a

POS 2b

NEW

- Construction 1x applied
- Gravel top of the table frame
- All steel components Hot -dip galvanised
- Weld: constructive min. 4mm, unless different indicated

pos.nr.	Amount	Description	Dimensioning	Material	Comments	Supplier	Item nr.
1	04	Plate 160x10mm	L=160mm	S235 HDG			
2a	02	L80x80x8	L=270mm	S235 HDG			
2b	02	L80x80x8	L=270mm	S235 HDG			
3	02	L80x80x8	L=650mm	S235 HDG			
4	02	L80x80x8	L=700mm	S235 HDG			
5	04	Plate 60x6mm	L=80mm	S235 HDG			
	04	Nut M16		St HDG[8]			
	04	Nord lock M16					

Place : 1092 CK Amsterdam
Address: Linnaeusstraat 2C
Area :

Site number : 4174

Drawing number : 0504-2

x/y: 123.413/486.096

Construction drawings

Scale		EP	Rev.	Date	Mod.	Chk.
Unit mm	3D	A3	0	24-02-25	MIS	JAV
Sheet 2 of 2 Sheets		Page 20				

KPN - MOBILE

Reference	Quantity	Standard Steel
GPS Ant Installation kit	1	

FRONT VIEW

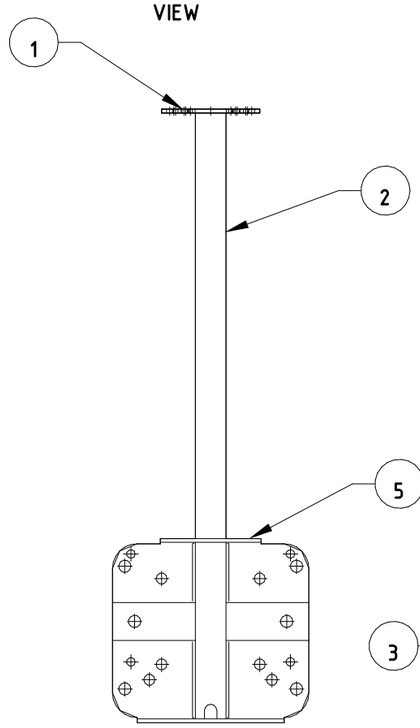

SIDE VIEW

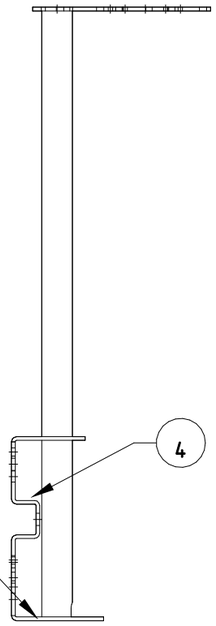

TOP VIEW

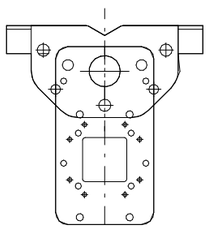

Pos. 1

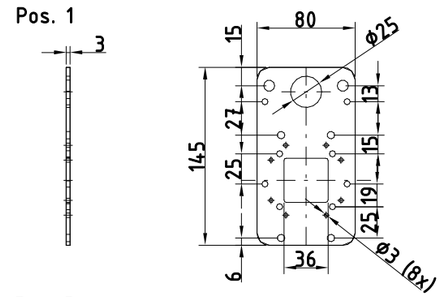

Pos. 2

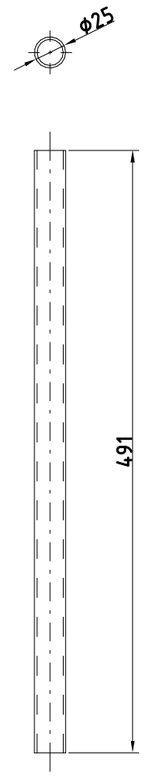

Pos. 3

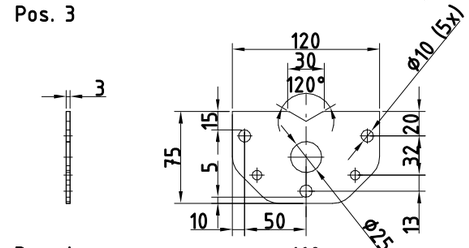

Pos. 4

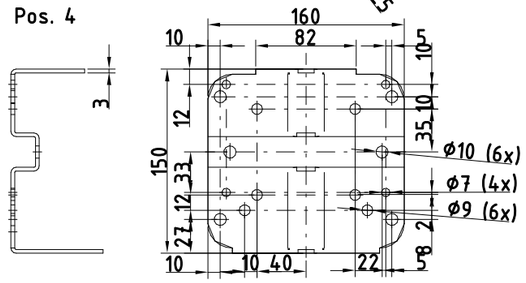

Pos. 5

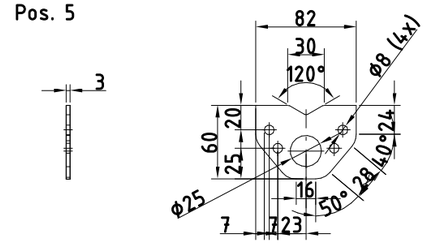

NEW

- Material: S235JRG2
-All welds a=4mm, unless stated otherwise
-All steel hot dip galvanized

Part	Quantity	Part description	Length	Material	Technical description notes
1	1	Plate 80x3	145 mm	S235JRG2	Weld to Pos. 2
2	1	Circular tube Ø25x2	491 mm	S235JRG2	Weld to Pos. 1, Pos.3 & Pos. 5.
3	1	Plate 120x3	75 mm	S235JRG2	Weld to Pos. 2 & Pos. 4.
4	1	Plate 160x3	150 mm	S235JRG2	Weld to Pos. 3 & Pos. 5.
5	1	Plate 82x3	60 mm	S235JRG2	Weld to Pos. 2 & Pos. 4.

Place : 1092 CK Amsterdam
Address: Linnaeusstraat 2C
Area :

Site number : 4174

Drawing number : 0505-1

x/y: 123.413/486.096 | Construction drawings

Scale		EP	Rev.	Date	Mod.	Chk.
Unit mm	3D	A3	0	24-02-25	MIS	JAV
Sheet 1 of 1 Sheets		Page 21				

KPN - MOBILE

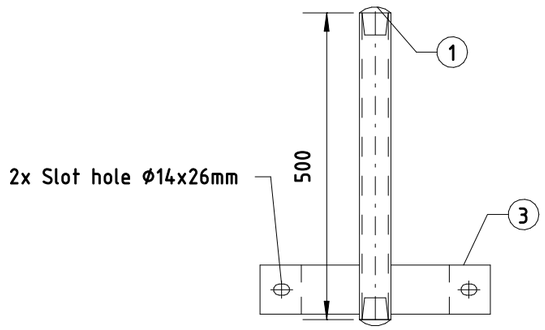

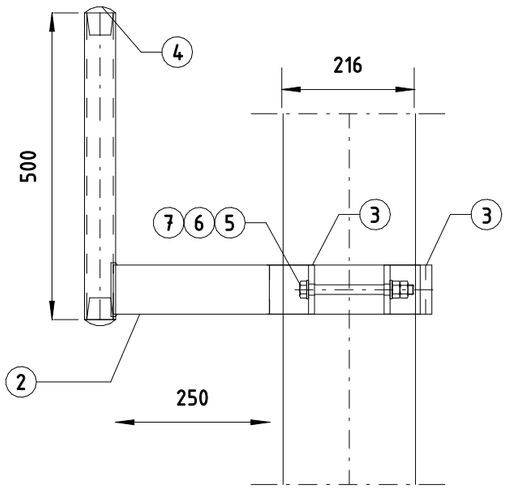

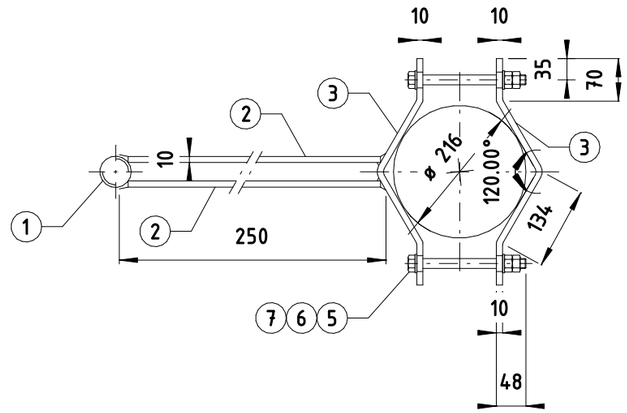

NEW

- Construction 1 x applied
- All steel components Hot-dip galvanize
- Weld: constructive min. 4mm, unless different indicated

pos.nr.	Amount	Description	Dimensioning	Material	Comments	Item nr.
1	01	Tube ø51,4x4mm	L=500mm	S235 HDG	Weld at Pos 2	10055
2	02	Strip, 80x10mm	L=250mm	S235 HDG	Weld at Pos 1 and 3	10056
3	02	Strip, 80x10mm	L=403mm	S235 HDG	1x Weld at Pos 2	10057
4	02	Cap		PVC	Tubeclamps Netherlands T-133E	10020
5	02	Bolt M12	L=180mm	St 8.8 HDG		50006
6	04	Nut M12		St HDG[8]		50012
7	04	Ring M12		S235 HDG		50013

Place : 1092 CK Amsterdam
Address: Linnaeusstraat 2C
Area :

Site number : 4174

Drawing number : 0506-1

x/y: 123.413/486.096 | Construction drawings

Scale 1 : 10 | EP | Unit mm | 3D | A3 | Sheet 1 of 1 Sheets | Page 22

Rev.	Date	Mod.	Chk.
0	24-02-25	MIS	JAV

KPN - MOBILE